Britbike forum

1973 T140 rocker spindles. Oil grooves? - 11/22, 2010, 2:46 pm Posted By: Coco

Does anyone happen to know if the rocker spindles on a 1973 T140 have the oil grooves cut into them?

Was this a late model T140 feature only?

Re: 1973 T140 rocker spindles. Oil grooves? - 11/22, 2010, 3:06 pm Posted By: John Healy

The oil grooves were introduced with the 1973 750 models.

Now if you subscribed to Vintage Bike you would know that :bigt

Re: 1973 T140 rocker spindles. Oil grooves? - 11/22, 2010, 3:14 pm Posted By: Coco

I actually just read that article you wrote (I think it was you who wrote it) about that issue, with the washers and the spring washers. Your article is what got me thinking about all this since the motor is on the bench right now. I was unsure if it was a mid year change over with oil grooves or if all the '73 models had it. Good to know I don't need to deal with the rocker spindles.

So just to clarify, solid washers against rocker then the spring washer?

I also have the plunger and no leaf springs in the transmission so I lucked out there too.

Re: 1973 T140 rocker spindles. Oil grooves? - 11/22, 2010, 4:12 pm Posted By: SPIKEXX

Hi John, read your article as well, I have a question, have a 1970 T120R, spindles have NO grooves, I will be getting my machinist to put the grooves in, would it be a good idea to change to rockers with the drilled oil holes or are the ones with the notches in the sides,as I have, be sufficient?

Re: 1973 T140 rocker spindles. Oil grooves? - 11/22, 2010, 4:34 pm Posted By: John Healy

> **Quote**
>
> So just to clarify, solid washers against rocker then the spring washer?

Yes, and you will have to buy one pair of 1/2" flat washers (70-1575) to do the job.

You can prove that the spiral groove are cut in your rocker shaft with a hand pressurized oil can. Cover the two feed holes with your fingers and squirt oil under pressure into the hole in the end of the shaft. The oil should flow freely out of the side of the rocker. If the pressure in the can builds, without any appreciable flow of oil out the side of the rockers, the shaft is not grooved.
John

Re: 1973 T140 rocker spindles. Oil grooves? - 11/22, 2010, 10:41 pm Posted By: btour

Drat,

I was hoping to find spiral grooved spindles at a reasonable price. Too late. Cat's out of the bag.

Re: 1973 T140 rocker spindles. Oil grooves? - 11/23, 2010, 7:21 am Posted By: Irish Swede

John, would you recommend this as an improvement we should use on earlier Triumphs?

Re: 1973 T140 rocker spindles. Oil grooves? - 11/23, 2010, 9:07 am Posted By: Coco

> **Originally Posted by Irish Swede**
>
> John, would you recommend this as an improvement we should use on earlier Triumphs?

I'd say yes since this is why I started the thread. I wanted to have the extra oiling capabilities to the rockers but it seems I already have the grooved spindles.

I'm unsure of the cost of new spindles vs having your originals grooved but I'd do it for sure and go with the most cost friendly method.

Re: 1973 T140 rocker spindles. Oil grooves? - 11/23, 2010, 9:48 am Posted By: Irish Swede

I checked one of my extra rocker spindles with a file, and it appeares to be hardened. It may be difficult or impossible to have old ones grooved. I don't have one of the later ones for comparison, so I ask:

Other than the grooves, are all other dimensions the same regardless of year, and are the rockers the same for all years?

Re: 1973 T140 rocker spindles. Oil grooves? - 11/23, 2010, 9:59 am Posted By: John Healy

Irish:
It is well documented that starting with the 650 engine number DU79965 changes were made to the oiling drilling in the rocker arms. It was based upon engineering done on the triple. It was supposed to increase the flow of oil to the rocker arm, valve guides and push rod cups. While the change was made to the rocker arms and they, and the push rod rocker ball, were no longer drilled. But the changes required for the system to work stopped there.

For the system to work you needed to block the hole in the rocker arm, put an oil groove along the rocker shaft to allow oil to flow to the ends of the rocker arms and flat washers placed against the rocker arm ends instead of the Thackeray washers. This is clearly illustrated in both the Trident parts manual and Workshop Manual.

If you look at the triple you will see that the rocker shaft has a oil groove the length of the rocker shaft. This groove allows oil to flow out of the ends of the rocker arms in some volume. That groove was never incorporated in to the manufacture of the 650, or 500 for that matter, rocker shafts. While a small amount of oil continued to make its way to the rocker, little made it past the middle of the rocker arm.

How this happened is a matter of conjecture, but "not designed here" probably had a lot to do with it. The triple was being designed at Umberslade Hall under the direction of BSA and the guys at Triumph had little respect for their efforts.

This oversight continued until 1973 when the rocker shaft finally received an oil groove in the form of a spiral cut along the length of the shaft.

Re: 1973 T140 rocker spindles. Oil grooves? - 01/14, 2011, 9:58 am Posted By: Coco

Just an addendum to this thread.

I sent out my rocker spindles to HHB and am getting the other end modified so I am going to run a pair of rocker feeds, one on each end. Figured the extra oiling could not hurt and the aesthetics will be more balanced now and symmetrical. I'll post some pics when I get all the parts back.

Re: 1973 T140 rocker spindles. Oil grooves? - 01/21, 2011, 7:57 pm Posted By: Matthew in TO

Why didn't the unit 500s have the oil grooves. Those motors go back to the 1950s before the internal bickering of BSA/Triumph.

I'm often worried about the oil flow to my rocker boxes. When I open my finned rocker covered I see a very little oil spashed up inside the covers, more so on the inlet side, so I know oil is getting up there.

What modifications can I make to a T100S to improve oil flow? Perhaps a Morgo rotary pump to increase pressure? Can I get the spindles cut?

Re: 1973 T140 rocker spindles. Oil grooves? - 01/22, 2011, 8:57 am Posted By: JubeePrince

Matthew,

There was a discussion on that about a month ago. You can see the thread here:

http://www.britbike.com/forums/ubbthreads.php?ubb=showflat&Number=348062#Post348062 (Link: http://www.britbike.com/forums/ubbthreads.php?ubb=showflat&Number=348062#Post348062)

Afterthought: If it was me, I'd forgo the Morgo and get the spindles machined.

HTH,

Steve P

Re: 1973 T140 rocker spindles. Oil grooves? - 01/22, 2011, 10:18 am Posted By: btour

I am with Steve.

Re: 1973 T140 rocker spindles. Oil grooves? - 02/03, 2011, 9:10 am Posted By: dracko

Hi all, hoping to get my rocker boxes assembled for the last time. 1971 T120. So doesn't have the grooved spindles, but wondering if it would be beneficial to revert back to the rocker arms that had an oil passageway drilled through the arm and into to the pushrod ball-ends? combined with proper washer order.

or is the grooved spindles the only way to improve top end oiling?

Re: 1973 T140 rocker spindles. Oil grooves? - 02/03, 2011, 12:20 pm Posted By: Coco

Originally Posted by JubeePrince

Matthew,

There was a discussion on that about a month ago. You can see the thread here:

http://www.britbike.com/forums/ubbthreads.php?ubb=showflat&Number=348062#Post348062
(Link: http://www.britbike.com/forums/ubbthreads.php?ubb=showflat&Number=348062#Post348062)

Afterthought: If it was me, I'd forgo the Morgo and get the spindles machined.

HTH,

Steve P

I'd think a Morgo rotary would be overkill for a street bike.

Re: 1973 T140 rocker spindles. Oil grooves? - 02/03, 2011, 4:04 pm Posted By: John Healy

The spiral grooved rocker shaft spindles are available under part number 71-3549. They were standard in 1973 and later 750 twin rocker boxes.

Re: 1973 T140 rocker spindles. Oil grooves? - 02/04, 2011, 10:03 am Posted By: JubeePrince

Originally Posted by dracko

or is the grooved spindles the only way to improve top end oiling?

dracko,

Certainly not the only way, but perhaps one of the better ways? The grooved spindle was incorporated into the twins after the design on the triple (Tridents and R3s). Whether the grooved spindle is superior (or not) in oiling over the drilled arms, I have no idea.

As John has previously said, the grooved spindle for the 750's will fit the 650's, the only difference being the acorn nut is UNF instead of CEI.

Triumph top ends don't need that much oil. What they do need is a little oil in *very specific places*.

Steve P

Re: 1973 T140 rocker spindles. Oil grooves? - 02/06, 2011, 12:05 am Posted By: dracko

Quote

dracko,

Certainly not the only way, but perhaps one of the better ways? The grooved spindle was incorporated into the twins after the design on the triple (Tridents and R3s). Whether the grooved spindle is superior (or not) in oiling over the drilled arms, I have no idea.

As John has previously said, the grooved spindle for the 750's will fit the 650's, the only difference being the acorn nut is UNF instead of CEI.

Triumph top ends don't need that much oil. What they do need is a little oil in very specific places.

Steve P

Okay thanks for the info Steve and John. I will do a little searching around for some grooved spindles.

I was also wondering if the drilled rocker arms are better than the undrilled. IIRC, the drilled arms were the earlier version so I wonder why Triumph would go away from them if they directed oil well?

Re: 1973 T140 rocker spindles. Oil grooves? - 02/06, 2011, 9:43 am Posted By: btour

Originally Posted by dracko

I was also wondering if the drilled rocker arms are better than the undrilled. IIRC, the drilled arms were the earlier version so I wonder why Triumph would go away from them if they directed oil well?

Good question. I suspect no one can say for sure. With those drilled ones and the spiraled rocker shafts you may get more oil, but maybe with the drillings all will go to the pushrod tube, and none of the increase to the valve end of the rocker.

And the drilled one may break.

As I understand from what I have read, they stopped drilling them because some of them broke. I am not sure of that. It maybe it was just cheaper to due it without drilling.

Faced with the choice I would probably perseverate to the point of paralysis and then in the end, opt for spiraled shaft, thackeray washers in the correct placement, and call the improvement sufficient.

Re: 1973 T140 rocker spindles. Oil grooves? - 02/06, 2011, 9:45 am Posted By: desco

It is my understanding that the drilled rockers were weaker than the non-drilled and more liable to break.

Re: 1973 T140 rocker spindles. Oil grooves? - 02/06, 2011, 11:09 am Posted By: dracko

Okay so they were snapping, good to know why they changed it up.

Quote

> but maybe with the drillings all will go to the pushrod tube, and none of the increase to the valve end of the rocker.

yeah I was thinking the same thing. strange design...you'd think they would drill both arms if doing one.

Thanks for the info Btour and Desco, I will continue to look around for some splined spindles and be done with it.

take it easy.

Re: 1973 T140 rocker spindles. Oil grooves? - 02/06, 2011, 12:58 pm Posted By: btour

> **Originally Posted by dracko**
>
> Okay so they were snapping, good to know why they changed it up.

Not so sure they snapped at the arm, but I have seen pictures of ones where the ball end with the hole in it, and the ball, cracked/broke around the hole.

Not so sure how to accomplish drilling the other end. There is the adjuster there. Can't drill that and line up a hole. One would still depend upon oil running along the outside.

Re: 1973 T140 rocker spindles. Oil grooves? - 02/06, 2011, 1:08 pm Posted By: btour

Interesting to think what might have been done, though. Piping in the top of the rocker box to drop feed each place it is needed including rocker spindle itself. Much like drip emitters for plants. That is as far as I can get right now.

Re: 1973 T140 rocker spindles. Oil grooves? - 02/06, 2011, 1:30 pm Posted By: John Healy

> **Quote**
>
> so I wonder why Triumph would go away from them if they directed oil well?

Well, it wasn't "Triumph" that made the change, but the group's engineers at BSA's Umberslade Hall. On paper all of the engineering transfered from Triumph to the new engineering group set up by BSA. This bit of engineering came from the development of the triple. The triple had this set-up from the first production models in 1969, and unlike the Triumph twin models, it has appeared correctly in the triple parts books and Workshop Manuals.

You know this group of merry men at what was fondly called Slumberglade Hall better as the ones that gave us the Oil in Frame 1971 twin models. Remember the frame that the Triumph engine wouldn't fit in when first delivered.

It isn't a secrete that the Meriden Men had little respect for BSA or their engineers and I suppose this didn't improve things.

Re: 1973 T140 rocker spindles. Oil grooves? - 12/09, 2011, 10:30 am Posted By: Coco

I am finally getting my rocker boxes back together and want to put my new top end on this weekend.

Just to recap:

Move thackary washer(spring washer)up against inner rocker box and have flat washers butted up against the ends of rocker arm.

Do I need to add an extra washer between the spring washer and inner rocker box? It seems the end of the spring washer can dig into the aluminum inner surface of the rocker box.

I read somewhere to buy a couple extra 1/2" ID washers (which I did) and I can't recall what I'm supposed to do with them or where they go.

Re: 1973 T140 rocker spindles. Oil grooves? - 12/09, 2011, 12:33 pm Posted By: JubeePrince

> **Originally Posted by Coco**
>
> Move thackary washer(spring washer)up against inner rocker box and have flat washers butted up against the ends of rocker arm.

Correct.

> **Originally Posted by Coco**
>
> Do I need to add an extra washer between the spring washer and inner rocker box? It seems the end of the spring washer can dig into the aluminum inner surface of the rocker box.

No. It seems like that is what will happen, but in fact will not.

> **Originally Posted by Coco**
>
> I read somewhere to buy a couple extra 1/2" ID washers (which I did) and I can't recall what I'm supposed to do with them or where they go.

They replace the 3/8" washers (2) that originally came with the asssembly(ies). If you look closely at the spindle, there is a step/shoulder near the threaded portion of the spindle. When you move the thackery further toward the end of the spindle, the flat washer needs to be 1/2" to clear the step/shoulder.

HTH,
Steve

Re: 1973 T140 rocker spindles. Oil grooves? - 12/10, 2011, 8:49 am Posted By: Coco

> **Originally Posted by JubeePrince**

> **Originally Posted by Coco**
>
> Move thackary washer(spring washer)up against inner rocker box and have flat washers butted up against the ends of rocker arm.

Correct.

> **Originally Posted by Coco**
>
> Do I need to add an extra washer between the spring washer and inner rocker box? It seems the end of the spring washer can dig into the aluminum inner surface of the rocker box.

No. It seems like that is what will happen, but in fact will not.

> **Originally Posted by Coco**
>
> I read somewhere to buy a couple extra 1/2" ID washers (which I did) and I can't recall what I'm supposed to do with them or where they go.

They replace the 3/8" washers (2) that originally came with the asssembly(ies). If you look closely at the spindle, there is a step/shoulder near the threaded portion of the spindle. When you move the thackery further toward the end of the spindle, the flat washer needs to be 1/2" to clear the step/shoulder.

HTH,
Steve

Steve, that helps so thanks for the info.I had one assembled and I did it the right way. I just wanted to make sure before I push it all in and get the o-ring seated in there.

Britbike forum

71 T100R and the Thackeray Unpleasantness - 12/14, 2010, 8:26 pm Posted By: ed_h

I realized too late that my workshop manual had the error on the order of assembly of the rocker arm spindles. I took the boxes apart again this last weekend and made it right. In the process I devised a way that seemed to work well to keep the spindle O rings intact when pressing the spindle home:

http://bullfire.net/Triumph/Triumph15a/Triumph15a.html (Link: http://bullfire.net/Triumph/Triumph15a/Triumph15a.html)

Re: 71 T100R and the Thackeray Unpleasantness - 12/14, 2010, 10:01 pm Posted By: HawaiianTiger

Nice work Ed.
Bill

Re: 71 T100R and the Thackeray Unpleasantness - 12/15, 2010, 7:05 am Posted By: JubeePrince

Hi Ed -

Just curious....I notice you have the later arms with the machined notches to direct oil flow. From your photos tho, it appears that there are no oil grooves in the spindles themselves....

Did they ever change this for the T100's like they did with the later T140's? Might be a worthwhile enhancement some point down the road....

Steve

Ed's most excellent web page - 12/15, 2010, 7:48 am Posted By: btour

Hi ed,

Nice work.

I have a few suggestions.

1) Make the photos a smaller file size (less resolution) so they load faster for dia up world.

2) You ground the valve adjusters? I would be careful of that. I think only the tip is hardened. In fact the allen replacements I have, I noticed that the end was actually smushed a bit, kinda like a campfire roasted marshmellow would appear... Confirming in my mind's eye that only the outside of the tip is hardenend, as it should be or the thing would be brittle and break. This is in fact what does happen with some of the available "mushroom" head adjusters. They break. Yikes.

2a) Speaking of breaking. We might also want to consider the lowly "lock nut" on the adjuster. The after market replacement ones which are available: how hard are they? Do we, any of us know the grade of steel used originally on these? And what the new ones are? I have word of mouth from some who have worked on a lot of bikes, that they have never ever cracked one of them, having had they strip first. And yet, I had a replacement one, crack in three places (not stripped threads), and the cracks did not come apart until 500 miles down the road from adjusting. So we must be aware and use very careful torquing on these after market lock nuts, if one is used to the old ones, and what worked for them.

3) Your camfer appears quite deep. How did you determine how far one could go? I would suggest it might vary, because as you point out the "caps" are pressed on, and that might vary as to how far. I have noticed that these stick out a different amount as I look at other bikes.

4) I have no idea how one made of steel as the originals were, and not aluminum, as some now are, could possible come off.

Re: Ed's most excellent web page - 12/15, 2010, 9:53 am Posted By: John Healy

While not all rocker boxes were chamfered during production, there is a 15° chamfer shown on the factory rocker box drawing.

This chamfer can be cut easily using a sharpened three corner file - often referred to as a machinist's scrapper. We have illustrated this in a rocker box article some years ago in Vintage Bike. If you haven't made yourself a three corner scrapper (or don't know what I am talking about) you can but them from several sources:

http://grizzly.com/products/3PC-MACHINIST-S-SCRAPER-SET/T10086 (Link: http://grizzly.com/products/3PC-MACHINIST-S-SCRAPER-SET/T10086)

http://www.google.com/products/catalog?oe=utf-8&rls=org.mozilla:en-US:official&client=firefox-a&q=machinist+scraper&um=1&ie=UTF-8&cid=8464923610114008828&ei=G-sITZzXG8GqlAfajomBAg&sa=X&oi=product_catalog_result&ct=result&resnum=2&ved=0CBsQ8wIwAQ#

Steve also makes a good point about the shafts themselves. For the later rocker arms (cuts on the side instead of hole in arm) and flat washers to work, the update must include some way for the oil to travel down the shaft. The rocker arm oiling was changed mid-year 1969 and should have included a change to the rocker shafts.

All this change came about with the design of the Trident/Rocket III and included an important detail of the new system which is required for the system to work: a groove the length of the shaft.

While Meriden adopted the cuts in the rocker arms, there was always confusion (except for Rod Coates 1969 Service Bulletin) about the position of flat and thackeray washers. They never addressed the groove in the shaft It wasn't finally adopted on the 1973 750 twin, but was never incorporated into 500 production. We covered all this recently in Vintage Bike - Autumn 2010...

Re: 71 T100R and the Thackeray Unpleasantness - 12/15, 2010, 9:58 am Posted By: twinspin

Hi Ed,
I hope that you chose Viton type O rings otherwise they will be goo a few miles down the road.
The taper makes sense and I doubt if you will have too many problems but I always put some sealant on the shaft before sliding in.
I was rather hoping that you would tackle the other leaky problem of the tappet inspection covers on the side as there is no really satisfactory way to get a long term seal on these with the stock plugs. There are two sealing methods. One is a special compressible copper washer like on a spark plug. This is ok to start with but funnily enough it compresses over time and the seal is lost. The other way is to use a viton O ring but you cannot tighten up too far otherwise the O ring spreads and either gets damaged or compromises the seal and then in use loosens. I have resorted to the most successful method for me and that is to use an O ring, thoroughly clean the threads with solvent and then apply a little loctite (the blue type)on the thread and tighten the plugs to the right compression. This usually works for longer than other methods but is far from perfect. What it really needs is a plug with a groove in the cap to prevent the O ring spreading and then the seal would keep the cap from loosening. This would be similar in principal to the rocker caps I purchased from Dave Degens which work perfectly in that application.
PS Just leave the high resolution pictures as they are and Bob get a decent internet connection - Its probably cheaper in the long run!

Re: 71 T100R and the Thackeray Unpleasantness - 12/15, 2010, 10:16 am Posted By: John Healy

Quote

PS Just leave the high resolution pictures as they are and Bob get a decent internet connection - Its probably cheaper in the long run!

Easier said than done in some remote parts of the US.....

And while the taper helps installing the "O" ring it isn't a panacea. Some "worrying" is still required to get the "O" ring in place without cutting it. We use P-80 to lubricate the "O" ring to ease assembly. Unless you know that the sealant is compatible with the material used to make the "O" ring it is best to avoid it.

Oh...And if you don't have the groove, either parallel or spiral, you will not get any oil flow through the rocker box! So going to the effort of changing the position of the flat washer turns out to be a wasted exercise.

Re: 71 T100R and the Thackeray Unpleasantness - 12/15, 2010, 10:54 am Posted By: btour

Hi Twiny,

In frustration, with the valve lash adjusting inspection hole plugs (whew), coming loose and leaking/weeping, I tried the Kopper spray coat stuff. On the washer, with the slit in it, and on the plug threads. Seems to work just fine.

With a razor knife or other slender tool one can re-open the slit in the copper washer and get it to work again.

Problem solved.

The other problem is the adjusting caps themselves. The larger plugs. Here a viton ring with a brass "sealing" washer, of the appropriate size, from a plumbing store, works very well indeed. Two problems solved.

One can use the newer style rocker boxes with the big window to the valves adjusters, but then one needs to have a lot of the special gaskets, and the good ones, too. Then one avoids the above problems. But with a bonne, the carb is such a place that getting one of the screws started for the big cover is a huge pain.

So which is better?

Re: 71 T100R and the Thackeray Unpleasantness - 12/15, 2010, 10:56 am Posted By: btour

Hi John,

Do I have the spindles with the groove? I do not remember noticing it.

Re: 71 T100R and the Thackeray Unpleasantness - 12/15, 2010, 2:25 pm Posted By: John Healy

The T140 spindle is a direct interchange with the 650 except for the acorn nut which is UNF instead of CEI.

Re: 71 T100R and the Thackeray Unpleasantness - 12/15, 2010, 6:44 pm Posted By: Mike Baker

Am I to understand that if I have a spindle without a groove, the position of the springs and washers is moot because the rockers get no oil anyway?

Thanks, Mike

Re: 71 T100R and the Thackeray Unpleasantness - 12/15, 2010, 7:38 pm Posted By: JubeePrince

> **Originally Posted by mblab**
>
> Am I to understand that if I have a spindle without a groove, the position of the springs and washers is moot because the rockers get no oil anyway?

Hi Mike,

> **Originally Posted by John Healy**
>
> Oh...And if you don't have the groove, either parallel or spiral, you will not get any oil flow through the rocker box! So going to the effort of changing the position of the flat washer turns out to be a wasted exercise.

I wouldn't say they get NO oil, but perhaps you could say not **enough** oil in the **right** places, i.e the valve tips and push rod tips....

I suspect you'd do well to either replace the spindles with ones with the spiral oil galley groove, or cut your own as this will significantly increase the oil flow and perhaps lengthen the service life of the valve tips.

Steve

Re: 71 T100R and the Thackeray Unpleasantness - 12/15, 2010, 8:41 pm Posted By: John Healy

The best "O" ring cure I have seen lately is the one posted to BritBike where the owner cut the shaft for a second "O" ring. All of the Triumph rocker shafts are two piece.

I think Steve described what happens without the oil galley groove. While a small amount of oil makes it to the rocker shaft to lubricate the rocker and its shaft, there is no appreciable flow of oil through the rocker as before.

On the models envolved (mid-1969 through the end of 1972) with stock oil tanks put a clear plastic tube in the over head oil line. You will see that the oil just sort of gurgles until you loosen one of the acorn nuts holding on the oil fitting. Then you can see oil flow freely through the tube.

Replace the shaft with one with a oil galley groove or spiral and you get the same results as loosening the acorn nut. Oil flows like it should.

Re: 71 T100R and the Thackeray Unpleasantness - 12/15, 2010, 11:12 pm Posted By: ed_h

Oh, great, John and Steve, now you've got me considering taking it apart again to add grooves.

Was this purely a design oversight, or did they think that the small amount of oil reaching the ends of the rockers was enough? The drawing in my Shop Manual that shows oil flow in the rocker box shows the end grooves in the rockers, but no grooves in the shaft.

Also, John, you've convinced me. I subscribed to Vitage Bike today.

To answer a few other questions--
btour (2)--I wouldn't really call it grinding the valve adjusters. More like smooting the surface and polishing. I did it in a few minutes with wet silicon carbide paper.

btour (2a)--in keeping with a general policy, I reused the stock valve adjuster lock nmuts since they were still in good shape.

btour (3)--The chamfer maximum depth was determined by careful measurement of where the O ring groove would end up when the spindle was in place. It was important to press the spindles into place instead of pulling them with the acorn nut. In my case, pulling them in displaced one of the caps. This might explain your observation that the caps stick out varying abounts on differnt bikes--possibly the caps have moved from their fully seated positions on the spindle. It would be interesting if John or someone could tell us how deep the chamfer went on the factory drawings.

twinspin--the O ring material is Buna N. Viton does have a higher temp rating but the material I used has a continuous temp rating of 250 degF, which I believe should be high enough. I believe what you get from most parts suppliers for this part is Buna.

Re: 71 T100R and the Thackeray Unpleasantness - 12/16, 2010, 3:40 am Posted By: twinspin

'twinspin--the O ring material is Buna N. Viton does have a higher temp rating but the material I used has a continuous temp rating of 250 degF, which I believe should be high enough. I believe what you get from most parts suppliers for this part is Buna.'

I hope that was a slip of the keyboard and you meant deg C. Otherwise it will end up being liquid. It gets pretty hot up there!

Re: 71 T100R and the Thackeray Unpleasantness - 12/16, 2010, 3:44 am Posted By: twinspin

'Hi Twiny,

In frustration, with the valve lash adjusting inspection hole plugs (whew), coming loose and leaking/weeping, I tried the Kopper spray coat stuff. On the washer, with the slit in it, and on the plug threads. Seems to work just fine.
With a razor knife or other slender tool one can re-open the slit in the copper washer and get it to work again.
Problem solved.'

Kopper Coat Spray has been withdrawn from sale in the UK now as it is considered too dangerous!

Re: 71 T100R and the Thackeray Unpleasantness - 12/16, 2010, 5:37 am Posted By: Britbiker1234

Quote

> This chamfer can be cut easily using a sharpened three corner file - often referred to as a machinist's scrapper. We have illustrated this in a rocker box article some years ago in Vintage Bike. If you haven't made yourself a three corner scrapper (or don't know what I am talking about) you can but them from several sources:

Made one 23 years a ago when I served my time as a machinist. Such a versatile tool, I'm still using it.

Re: 71 T100R and the Thackeray Unpleasantness - 12/16, 2010, 6:57 am Posted By: JubeePrince

> **Originally Posted by ed_h**
>
> Was this purely a design oversight, or did they think that the small amount of oil reaching the ends of the rockers was enough?

Hi Ed -

It seems the design changes were made at the engineering end (BSA/Umberslade), but for various reasons (John could elaborate on this part) the changes either didn't make it to Meriden or were ignored....hence the confusion in the parts books, workshop manuals and service bulletins...

Now, if you look at the triple manuals that originated in the BSA group, you'll find the correct information for these three changes (machined rockers, washer placement and grooved oil galleys).

Steve

Steve

Re: 71 T100R and the Thackeray Unpleasantness - 12/16, 2010, 8:20 am Posted By: Mike Baker

I wonder just how much difference the grooved shaft makes. As a longtime (almost 30 years) owner of a 71 T120, I can't say that I've experienced any problems in the rocker area aside from 2 valve jobs I've done in 30K miles.

A soultion looking for a problem?

Mike

Re: 71 T100R and the Thackeray Unpleasantness - 12/16, 2010, 9:30 am Posted By: John Healy

> **Quote**
>
> aside from 2 valve jobs I've done in 30K miles.

Hmmm, I think you answered your own question.

The rocker arm bearing surface gets adequate oil and I personally haven't seen any rocker arm/rocker shaft bearing problems/failures because of this.

But think of the rest of the kit: Rocker buttons and push rod cups, valve tips and rocker adjusters and valve stem and valve guide.

It is the oil FLOW that distributes lubricating oil to these surfaces. Without the flow, and there is little without the oil galley cut into the shaft, how do these get lubricated?

Re: 71 T100R and the Thackeray Unpleasantness - 12/16, 2010, 12:32 pm Posted By: Mike Baker

Well, I did the first VJ about 20000 miles ago and the second just this summer. From what I've understood, getting 15/20K is about the norm?

Mike

Re: 71 T100R and the Thackeray Unpleasantness - 12/16, 2010, 3:13 pm Posted By: JubeePrince

I got 24K - 26K out of the originals, this with the grooved shaft, but incorrect washer placement. Now, if you hunt up my valve job thread from last April, you'll see that the valve tips and rocker adjusters were totally knackered! All due to the incorrect placement of the washers....

The push rod cups and rocker buttons were fine, but only because they relied on the oil galley in the spindle and the relief machined in the rocker arms....

I replaced the guides and valves with quality material (Black Diamond) and corrected the washers....remains to be seen, but I hope to get upward of 30K out of the top-end through regular road riding...

Steve

Re: 71 T100R and the Thackeray Unpleasantness - 12/16, 2010, 6:33 pm Posted By: Mike Baker

Interesting, Steve
I saw no evidence of the wear you had on my motor. My problem was seriously worn guides and valve stems.
Mike

Re: 71 T100R and the Thackeray Unpleasantness - 12/16, 2010, 9:52 pm Posted By: ed_h

Are the spindle oil grooves spiral?

Re: 71 T100R and the Thackeray Unpleasantness - 12/17, 2010, 6:26 am Posted By: JubeePrince

ed -

Yes. I'll try and hunt up a photo of mine....

Steve

Re: 71 T100R and the Thackeray Unpleasantness - 12/17, 2010, 6:35 am Posted By: John Healy

The T140 has a spiral while the Triples have a straight groove the length of the shaft.

Re: 71 T100R and the Thackeray Unpleasantness - 12/17, 2010, 8:13 am Posted By: JubeePrince

ed -

Couldn't find the photos of mine, but I took the liberty of scanning a photo of a T140 shaft (bottom spindle) from ***Vintage Bike***:

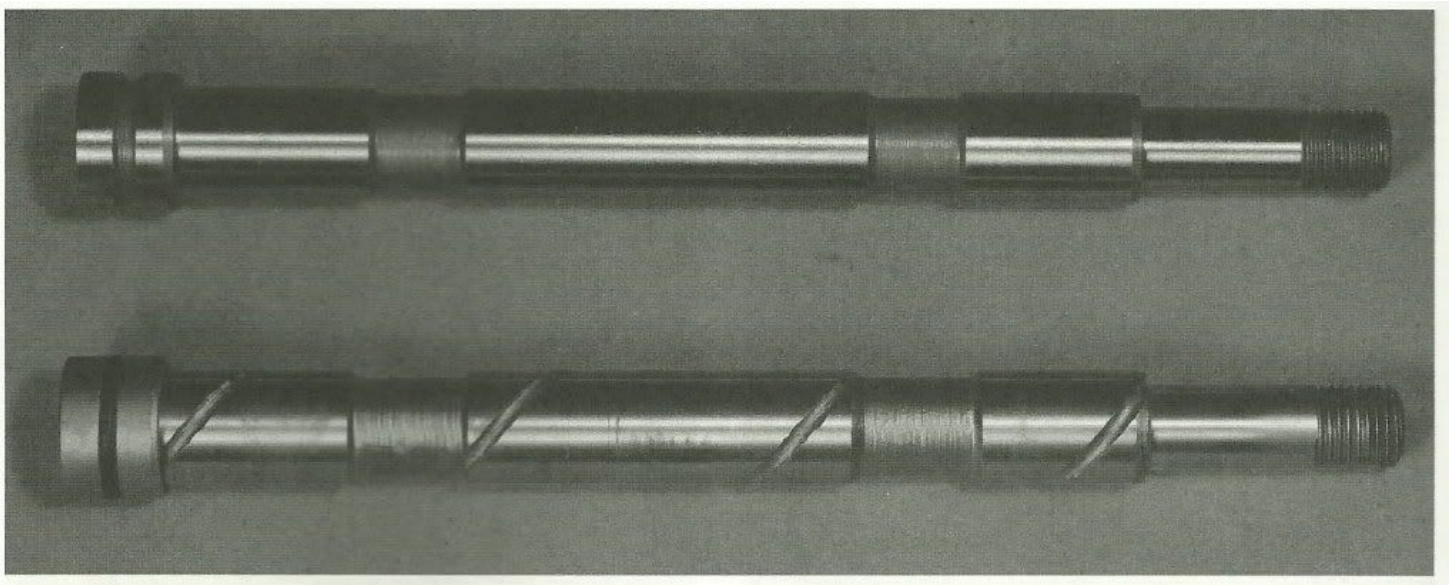

hth,

Steve

Re: 71 T100R and the Thackeray Unpleasantness - 12/17, 2010, 10:28 am Posted By: John Healy

Ok, where are the corporate lawyers... Bubba, Bubba where the heck are you!!!!

Re: 71 T100R and the Thackeray Unpleasantness - 12/17, 2010, 2:44 pm Posted By: JubeePrince

I knew I should have asked first!

Steve

Re: 71 T100R and the Thackeray Unpleasantness - 12/17, 2010, 6:14 pm Posted By: ed_h

So, hypothetically, if a guy wanted to add oil grooves to his ungrooved spindles, would spiral grooves be preferred? I would have thought so, but then someone mentioned that the triples had a straight groove.

Obviously, a straight groove would be a lot easier. Maybe even just a flat. If the straight groove or flat were positioned at the top, there wouldn't even be any reduction of bearing surface.

Re: 71 T100R and the Thackeray Unpleasantness - 12/18, 2010, 8:18 am Posted By: JubeePrince

ed -

I am not qualified to answer the above question, BUT, if the straight groove would work, I'd be sure it's in line with the oil holes in the shaft...

Steve

Re: 71 T100R and the Thackeray Unpleasantness - 12/18, 2010, 9:56 am Posted By: twinspin

Don't forget Steve that this is a T100R and the oil is fed through the top of the rocker box to the bearing surface in the centre of the shaft and I would think that it would be better for rocker and valve tip lubrication if it didn't align. A straight groove is better than nothing I suppose but the oil will distribute more easily with a spiral groove.

Re: 71 T100R and the Thackeray Unpleasantness - 12/18, 2010, 11:04 am Posted By: John Healy

While the 500 is center fed the oil enters into a cavity created by a turning on the rocker shaft. It would be the area of the turning (reduced diameter of shaft) that would be feeding the new oil galley. The only advantage of the spiral is it doesn't matter how you install the shaft.

The original trident design has the straight groove, and the witness marks from rocker arm wear on the the old used shafts I have on the shelf indicate that the groove was aligned toward the top of the engine.

Re: 71 T100R and the Thackeray Unpleasantness - 01/23, 2011, 3:18 pm Posted By: Matthew in TO

Okay, so has anyone cut the grooves into the spindles of their T100 unit engine rockers? How is it done? What are possible pitfalls? Pictures?

Re: 71 T100R and the Thackeray Unpleasantness - 11/20, 2012, 3:52 pm Posted By: Snakeoil

I'm resurrecting an old thread to get some additional input.

I just tried to install the rocker spindles with new o-rings from one of John Healy's gasket kits and even with my version of the handy-dandy factory tool. I cut a tiny thread of rubber off the OD of the o-ring on each of two attempts.

John Healy said to use P-80 lubricant in this thread. I used STP on one and grease on the other because I did not have P-80. Each time I snipped a small thread of rubber off the OD of the o-ring.

My tool is alum, has about a 6 degree taper to slowly compress the o-ring, but it still seems to get pinched when it reaches the final diameter of the tool which is pretty much a line fit to the spindle cap. After I cut the first o-ring, I put the tool back in my lathe and hand polished the transition from tapered to straight section until I could not feel the change. It still cut the o-ring. I was sure this was going to be a snap do do with the tool. Not so.

Below I believe (read a few other threads) there is mention that shaving a small amount from the o-ring is acceptible. I've never heard it was okay to damage any o-ring during the installation process. Has anyone here installed new o-rings, had the o-ring get slightly snipped in the process and still maintained a proper seal?

I guess I'm going to go buy a bag of o-rings tomorrow.

Can someone please confirm the correct o-ring size. ed h's webpage below shows a bag of 011 o-rings. But looking up that size shows a 0.070 inch cross-section and my groove is 0.058 inch wide. ID of the groove is 0.550 inch. The o-rings that came in the gasket set from John's Coventry Spares has a 0.050 inch cross-section and an ID of 0.500 inch. I cannot find a standard o-ring size with those dimensions.

Last question is where do you buy P-80. I can order it on-line but if it is standard for some type of business (plumbing, refigeration, etc.) I could try a local shop when I head out for o-rings.

Thanks,
Rob

Re: 71 T100R and the Thackeray Unpleasantness - 11/20, 2012, 5:44 pm Posted By: Old Cafe Racer

Rob
I just replaced the O rings on my Daytona yesterday, I think this is not that critical as I had used BS012 rings last time (all I had to hand at the time: 3/8" x 1/2" x 1/16"
They are a bit smaller than the shaft but stretched on just fine and worked good.
Yes they shave a perfect ring off the outside when installed but no leaks at all.
I used the same rings this time and lubricated them with Loctite hydraulic seal on assembly just for good measure.

.

Re: 71 T100R and the Thackeray Unpleasantness - 11/20, 2012, 6:17 pm Posted By: Old Cafe Racer

I just re-installed the rocker shafts on my '73 Daytona and I did carefully look at the oil distribution.
Two things I considered: 1/. This engine has made it 39 years with the original setup.
2/. Unless done specifically, since the oil enters via the central port in the rockerbox into a turned down gallery in the shaft, each time the rocker shafts are installed the thrust worn segment will be in a different position and not at the bottom of the rocker shaft thereby creating a gap for oil to flow down sideways.
So all I did was put the worn part of the shafts at the top.
No groove needed except perhaps on a new rocker and shaft.

.

Re: 71 T100R and the Thackeray Unpleasantness - 11/20, 2012, 6:27 pm Posted By: desco

http://p80lubricants.com/ (Link: http://p80lubricants.com/)
Contact them and let them know you restore old Triumphs. They will send you a box of free samples that amounts to a lifetime supply for most people.

Re: 71 T100R and the Thackeray Unpleasantness - 11/20, 2012, 8:35 pm Posted By: ed_h

Rob--

Interesting that you resurrect this topic right now. I'm just now reinstalling the O rings after grooving my rocker spindles. Your spindles must be different than on my T100R, since the bottom of the ring seat on mine are about 0.490".

I think anything smaller than 0.070 will be hard to find for the ID you need, at least in SAE sized rings. There is apparently a British Standard series where rings in this ID rage have an 0.063" cross section. Don't know where you can get them in the US.

I'm with you in not buying that shaving the O ring is normal.

Re: 71 T100R and the Thackeray Unpleasantness - 11/21, 2012, 8:05 am Posted By: Snakeoil

I did find a website after posting here that give you an o-ring locator tool where you fill in ID and CS and they return an o-ring that fits those specs. Closest they come is .549 ID. I'm sure the rings I got from Conventry are .500, althoug it is really hard to accurately measure an o-ring with dial calipers.

Ed, that is interesting that your groove diameter is a nominal .500. If you were to use the o-ring

supplied by Coventry in their kit, you would have zero compression since the o-ring is only .050 CS. I wonder if someone did not remachine your caps to take a more commonly available o-ring?

I'm off to a rubber and gasket industrial supply house this morning. Might be able to find both the o-rings and the lube or an equivalent lube. There is a vintage Brit bike shop on the way so I can see what he has to offer as well and get his input on installing these little muthas.

Thanks for the feedback.

regards,
Rob

Re: 71 T100R and the Thackeray Unpleasantness - 11/21, 2012, 12:03 pm Posted By: John Healy

> **Quote**
>
> I just tried to install the rocker spindles with new o-rings from one of John Healy's gasket kits and even with my version of the handy-dandy factory tool. I cut a tiny thread of rubber off the OD of the o-ring on each of two attempts.

The factory tool is useless.!!!!!!!!!!!!!!!!

> **Quote**
>
> Below I believe (read a few other threads) there is mention that shaving a small amount from the o-ring is acceptible.

It is not acceptable unless you want the "o" ring to leak oil!!!!!!!!!!!

We have covered this several times in Vintage Bike magazine over the past 25 years (unabashed plug for magazine). While the factory drawing shows a 15° chamfer (not 45 as many belive!!!!) at the lead edge of the rocker spindle hole in the rocker box. Few of the rocker boxes made it out of the factory with it cut. The outer diameter of the lead should be large enough to almost allow the "o" ring to enter the rocker box. Then with a small tool (I use a small 90° screwdriver I use for piston circlips - the Snap-On guy used to give them out as Xmas gifts and we heated and bent them 90°) and a slight bit of hand pressure by the installer.

As the "O" ring reaches the edge of the rocker box (and the 15° chamfer) use the screw driver to tuck the outer edge of the "o" ring into the rocker box. You don't do this with one go, but a series of tuck "o' ring and tap shaft, repeated until the shaft is in place.

The key to all this is P-80 and the 15° taper!!!!! PM me and I will send you more "o" rings. Actually there should be 2 smaller "o" rings in the bag. They are the earlier style where they were stretched over the shaft. It looks like they are too small, but they aren't. They leave exactly the same amount of "o" ring showing above the shaft. The old timers will remember the smaller 70-3253 "o" rings

Think about Joseph-Ignance Guillotin and what he could do with the Guillotine.

While we can go to great lengths to cut the chamfer into the rocker box, I find that you can do more than an acceptable job with a 3 side file that has been sharpened into a 3 side cutting tool. You want to grind the three sides so they have a concave face leaving the 3 edges sharp. If you haven't made one of these you should. You can also buy them already made from most machine shop supply houses.
John Healy

Re: 71 T100R and the Thackeray Unpleasantness - 11/21, 2012, 7:49 pm Posted By: Snakeoil

John, thanks for the insight. And thanks for the offer of more o-rings. Yes, the smaller ones are in the package. I was wondering what they were for. Might give those a go tomorrow. I actually picked up 4 new o-rings from Steve at M&S. After much effort with my homemade OEM tool, I came to the conclusion that you cannot install them with that tool and not shave the o-ring. Glad to see you have confirmed that conclusion.

I was a machinist in a former life and am very familiar with the scraper you describe, made from a triangular file. We actually use the store made scrapers in the turbine business for scraping in bearings and bearing housing joints.

I have two new o-rings left, so even though I'd come to the conclusion it is not possible to get those o-rings installed without shearing some rubber off, I'm willing to give it another go. I have a huge selection of dental instruments with which to make the tool you recommend.

I've wanted to subscribe to Vintage Bike. Just have never gotten around to it. Guess I'll move that up on the to-do list.

So, based on your experience with installing these little bastards, do you think the factory put forth the same effort. Or do you think, as I do, that the rockerbox assembly area at Meriden was knee deep in o-ring shavings?

Thanks and regards,
Rob

Re: 71 T100R and the Thackeray Unpleasantness - 11/21, 2012, 9:16 pm Posted By: HawaiianTiger

Rob,
There's more than one way to skin a cat....
I use a tool similar to the factory tool that I made myself. I sometimes shave a bit of rubber off, but usually not. I also coat the end of the shaft with gasket sealer. I use Ultra blue, a kind of silicone sealer but probably anything would do. It acts as a lubricant, too.
I take the time to make a better chamfer on the rocker box before I install them and I chamfered the outside of the tool to match what I do to the rocker boxes. I use what is called a bearing knife which was used in the old days to size white metal babbitt rods. I got mine from Snap-on but I don't know if they still sell them. I get a lot of use out of it for many other purposes, too.
Early on, Triumph didn't even use an O-ring there. Yeah, they wept oil, too, but back then a little oil here and there was no big deal.
I like to draw the shaft in using 3/8" by 26tpi nuts and washers instead of pounding them in. I don't like dents on my rocker shaft ends especially if I've gone to the trouble of having them cad plated.
Occasionally I'll separate the end cap from the shaft, which is a drag, but I usually have a few laying around plated and ready to go, so no big deal.
BTW, I usually have to remove the plating from where the rockers ride.These things don't seem to wear out unless they've been abused as sometimes happens with hot cams or lack of oil.
Cheers,
Bill

Re: 71 T100R and the Thackeray Unpleasantness - 11/22, 2012, 7:34 am Posted By: John Healy

For those that don't know what we are talking about:

http://store.440source.com/Bearing-Knife/productinfo/200-1122/ (Link: http://store.440source.com/Bearing-Knife/productinfo/200-1122/)

Bill: you should have someone give you a leather mallet.

A leather mallet is as handy as the three corner file sharpened into a knife. I have a half a dozed from 6" to 12" long.

Another factor in getting the "o" ring into place is the hole in the rocker arm wears with time and use. The rocker shaft is under a lot of pressure.

Dental tools are too small, but a pocket screw driver (bent to 90° and narrowed a bit), makes a perfect tool. With a bit of practice you will be able to put the "O" ring in place without cutting it! Just remember as the "o" ring approaches the edge of the rocker box to tuck the the "o" ring into the bevel and tap - with a leather, or plastic, mallet - continue to tuck and tap until you are all the way in.

WHy buy a commercial bearing knife when you can find all sorts of dull triangular files that can have a second life as a bearing scrapper?

Re: 71 T100R and the Thackeray Unpleasantness - 11/22, 2012, 8:24 am Posted By: Snakeoil

Thanks guys. I guess I'll definitely give it a go. I wish I'd picked up more than 4 o-rings from Steve. He's gonna bust my chops when I go back for more. He uses Theebond or black RTV just ahead of the o-ring and even though he says he always shears a little of the ring, they never leak with the sealant in there.

But being a bit on the anal side, I like my o-rings to be properly installed. It's a good therapy project.

John, a rawhide mallet was one of the primary tools included in the machinist chest I had to buy when I was an apprentice machinist. I still use it to this day. Although dead blows in various sizes have become more of my go-to mallets now. Plastic tipped mallets/hammers are another handy item. I see them all the time in garage sales and always buy them.

Bill, I made a modified factory tool similar to what you describe. Here's a pic. The end it a little beat up from being used.

What I found was even with the gradual taper of 6 deg inside the tool and lots of lube, it would shear a tiny thread of o-ring as it went from the tapered section to the straight section of the tool.

regards,
Rob

Re: 71 T100R and the Thackeray Unpleasantness - 11/22, 2012, 9:02 am Posted By: John Healy

The problem with all of this, is the hole in the rocker box is quite a bit larger than the cup on the shaft. This allows the shaft to move as the rockers rock. If you don't believe this look at some old shafts where they are supported by an aluminum boss between the rockers. These shafts are under sized and under supported.

Given that the cup will move with the flexibility of the "o" ring is an important consideration and resultant compression, as the pressure changes from one direction to an other is important. If part of the "O" ring is missing it can provide a path for oil to leak as the shaft moves. This movement also has a tendency to "work" any sealant reduces its ability to seal.

You see this in the 500 twin when it is raced. Three Bond, or any sealant I have used, to seal the crankcase parting surface will be degraded to the point where it is just an aluminum/sealant slime. The action of the two surfaces abrading will render the sealant useless. This is cured by doweling the two case halves together.

I still prefer hand installing the "o" ring after cutting a 15° lead at the hole's edge, lubricated with P-80 and a plastic or leather mallet. No sealant, no fuss, no problem!

Re: 71 T100R and the Thackeray Unpleasantness - 11/22, 2012, 9:55 am Posted By: Woodsie

About 30 years ago, I went to replace my o rings and when I removed the installed ones, the outside edge was flat and I actually went around a few shops trying to find o rings that had a flat surface. Still embarrassing to think about. BTW, who or what is Thackeray.

Re: 71 T100R and the Thackeray Unpleasantness - 11/22, 2012, 10:39 am Posted By: Deadstiffcatt

> **Originally Posted by 79T140E**
>
> About 30 years ago, I went to replace my o rings and when I removed the installed ones, the outside edge was flat and I actually went around a few shops trying to find o rings that had a flat surface. Still embarrassing to think about. BTW, who or what is Thackeray.

Hmmmm, someone else did the same thing? I don't feel quite so dumb anymore!!

Re: 71 T100R and the Thackeray Unpleasantness - 11/22, 2012, 1:04 pm Posted By: HawaiianTiger

I have a question regarding the Thackery washer. As I understand it, the edge of the end of the washer falls into the groove of the rocker shaft. (BTW, I've never worked on a motor with grooved rocker shafts. That's late model stuff).
So, since that happens it can block the flow of oil to the rest of the rocker assembly. Then if that washer is outboard of the plain washer that doesn't happen.
Question. Couldn't the washer be modified so that it couldn't block the passage?
Seems like a no-brainer to me.
What gives?
Bill

Re: 71 T100R and the Thackeray Unpleasantness - 11/22, 2012, 6:20 pm Posted By: JubeePrince

Bill -

It actually falls into the machined divot on the side of the rocker ARMS, not the shaft.

As to re-engineering the Thackeray, perhaps it's just as easy (or easier) to swap the Thackeray and thrust washers?

Cheers,

Steve

Re: 71 T100R and the Thackeray Unpleasantness - 11/22, 2012, 7:04 pm Posted By: Snakeoil

Had two E3253 o-rings left so gave it a go with John's procedure today. Did better, but not perfect. I think it's a matter of getting the feel for what needs to be done to be successful. Second try went better than the first, but still not perfect.

I cut the shallow lead in chamfer per John's instructions with a small 3/16" lathe bit. They make great scrapers for things like this.

Turkey-day cut my day short so never got to try the tiny o-rings that came in John's kit. Will try those tomorrow and if I strike out again, I'll give Steve a call at M&S and see if he's open. He was rebuilding his plow truck so I'll bet he'll be in the shop working whether he's open or not.

I'm thinking that the tiny rings may be less prone to getting snipped and might be the secret to success.

John, I know you were not too keen on using dental tools, but these worked pretty well. I think I need to change how I sharpened the one on the left. It was my primary tool.

I have a restoration thread going on over on the Triumphrat vintage forum if you want to read the painfully detailed blow by blow. Here's the link.

http://www.triumphrat.net/members-restoration-and-rebuild-projects/182047-robs-1966-t120r-resto.html (Link: http://www.triumphrat.net/members-restoration-and-rebuild-projects/182047-robs-1966-t120r-resto.html)

regards,
Rob

Re: 71 T100R and the Thackeray Unpleasantness - 11/22, 2012, 9:46 pm Posted By: shel

Originally Posted by Deadstiffcatt

> **Originally Posted by 79T140E**
>
> About 30 years ago, I went to replace my o rings and when I removed the installed ones, the outside edge was flat and I actually went around a few shops trying to find o rings that had a flat surface. Still embarrassing to think about. BTW, who or what is Thackeray.

Hmmmm, someone else did the same thing? I don't feel quite so dumb anymore!!

It happens often, customer says "That's not it, mine is a square cut o ring"
My replay, "no, yours was a round o ring compressed into a square cut groove for xx amount of years"

I've never had the rocker shaft installer tool, I've always used the small pocket screwdriver with the sharp edges softened, unlike John I never thought to give it a bit of a bend to make it easier to use. I'll do that next time.

Re: 71 T100R and the Thackeray Unpleasantness - 11/23, 2012, 7:36 am Posted By: Snakeoil

My T140V weeps a bit from the spindles and replacing the o-rings is on my to-do list. I know this engine has never been apart since leaving the factory so you can bet that I'm going to take a close look at the o-rings to see if they were snipped when installed.

regards,
Rob

Originally Posted by 79T140E

BTW, who or what is Thackeray.

Rhymes with wackery and quackery . . .

(Link: http://TR6Ray.zenfolio.com/p618941417/e907603a7)

Britbike forum

Improve oil to rocker boxes Triumph pre unit twins - 08/15, 2012, 2:40 pm Posted By: sonnehaerdt

This might be interesting to people, who like me, are worried about the very little oil getting to the rocker boxes.(One of my bikes is an Aermacchi Ala Azzurra and she gets plenty of oil to the rockers by forced feed directly from the oil pump).On my Tiger-100, 1955, after noting that the new valve adjusters showed signs of wair pretty quickly I put a hose clamp around the tube in the oil tank to restrict the small hole at the top.Effectively there was some improvement but measurements showed that to get a reasonable pressure of some 3 meter oil column (about 0.24 barg)half of the hole had to be covered. At low revs the pressure however still remained at about 1.5 meter of oil column (about 0.12 barg).If the hole is restricted further you risk that the hoses are blown off at high revs.Recently it came to my mind that a suitable spring loaded non return valve might be the solution.The non return valve is mounted in the oil return line to the oil tank and upstream of the valve there is a T-piece where on the branch of the T the oil line to the rocker boxes is installed.The original branch off to the rocker boxes at the oil tank I have capped off.I have set the spring to open at 0.7 barg (10 psig)and checked with a suitable pressure gauge (the oil column method is not practical anymore at these pressures, unless you put a clear petrol type hose about 10 meters up in the air). At high revs the pressure slowly goes up to some 1 barg,since the capacity of the non return valve is taken large enough (some 20 liters/minute at 2.5 bar pressure drop). Another advantage of the non return line is that the oil line to the rockers remains completely filled even after time, so there is oil up there after the first kick. So there is always oil with a pressure in the range of 0.7-1 barg going to the rockers regardless the revs.The non return valve is a 1/4 inch from Flowfit (www.flowfitonline.com (Link: http://www.flowfitonline.com))and costs about GBP 4.2 excl. transport outside the UK.For the fittings (hose joiners, T-piece, clamps etc.) I used stuff from advanced fluid solutions (www.advancedfluidsolutions.com.uk (Link: http://www.advancedfluidsolutions.com.uk) The whole system works very well, if you remove the screwed rocker box caps it is all greasy proving that there is really oil around there. (This also gives some peace of mind when riding through the country side).

Re: Improve oil to rocker boxes Triumph pre unit twins - 08/15, 2012, 5:58 pm Posted By: JubeePrince

While I know next to nothing about the pre-unit rockerboxes or oil flow, I can tell you that on the unit engines, **very little oil is needed, but the oil needs to be deposited in very specific locations**: valve tips and rocker arm ball pins.

In many cases, unless some sort of valve seal is used, increasing oil pressure or flow to the rockerboxes can have unintended consequences.

Steve

Re: Improve oil to rocker boxes Triumph pre unit twins - 08/16, 2012, 10:13 am Posted By: triton thrasher

How many miles have you done with this setup?

The standard method of directing oil to the head (restriction of scavenge flow into the tank by hole size) is crude of course, but has no moving parts and cannot stick.

What happens when the engine is idling slowly and there is not enough pressure to open your valve? Does all the scavenged oil go to the rocker gear? That wouldn't be good!

New adjusters and valve tops show wear almost immediately. I don't think any amount of oil will change that.

Re: Improve oil to rocker boxes Triumph pre unit twins - Posted By: sonnehaerdt
08/18, 2012, 3:46 am

I am not an expert on unit construction, but I believe these have internal oil canals in the rockers bringing the oil directly to the valve tips and push rods and there are I think longitudinal grooves on the spindle for some models.
Nothing of all this is on the early pre-units. The spindle has an internal oil canal and a circumferential groove. Oil is supposed to seep from between the spindle and the rocker at both ends of the rockers. This oil is moved around by the motion of the rockers and should find its way to valve tips, push rods and valve stems.
The quantity logically depends on the feed pressure and the play between spindle and rocker.
I have been watching the spark plugs and silencers frequently, and there is no sign of increased oil consumption.

Re: Improve oil to rocker boxes Triumph pre unit twins - Posted By: sonnehaerdt
08/18, 2012, 4:10 am

I did some 1500 km so far.
I don't see the problem of valve sticking when the oil system is propperly maintained. The valve has hardened and ground internal steel parts (no rubber seats etc). The construction (with a guided cone) is comparable or even better than most pressure relief (ball) valves in early pre units. I forgot to mention that I have already longtime an oil filter (Norton Type) installed under the right swing arm directly behind the (separate) gear box.
The valve will always open, also at idling speed since the positive displacement (piston type) scavenge pump can bring pressure easily up to 4 barg or higher.The amount of oil to the rockers depend on the clearance between spindle and rocker and of course the pressure.
I took 0.7-1 barg because this approximately doubles the amount of oil to the rockers (at least theoretically by hydraulics law).
I stoned away the initial marks on the valve clearance adjusters.
Then I did a Moto Giro and Milano-Taranto under tough conditions and some local trips alltogether some 4000Km.When checking some pitting was observed and this did me come to the idea of increased constant pressure.Now I have stoned away the (little) pits and I will closely observe what will happen now on the long term.

Re: Improve oil to rocker boxes Triumph pre unit twins - Posted By: triton thrasher
08/18, 2012, 5:17 am

> **Originally Posted by sonnehaerdt**
>
> The construction (with a guided cone) is comparable or even better than most pressure relief (ball) valves in early pre units.

I didn't know they ever used ball valves for oil pressure relief.

Re: Improve oil to rocker boxes Triumph pre unit twins - Posted By: sonnehaerdt
08/21, 2012, 1:44 am

I mean the spring loaded spherical thing.
By the way this type of oil pressure release valve is on my BSA A10 and B33. The Triumph T100 has a sort of spring loaded piston for this purpose.

Triumph T100, 1955----Bonneville T100,2008
BSA A10, 1954---------Kawasaki W800,2012
BSA B33, 1956
Aermacchi Ala Azzurra 1963
Gilera Giubileo 1962

Re: Improve oil to rocker boxes Triumph pre unit twins - 08/21, 2012, 2:13 am Posted By: Mattsta

Lube to the rocker boxes does seem very borderline.

God knows how the valve guides get any lube at all.

The lower external oin drain bango bolts on the push rod tubes leak slightly on mine so there is definitely oil draining from the rocker boxes into the crankcase.

I always squeeze the return pipe behind the scavange feed for a few seconds on start-up. This forces some oil up the scavange pipe and into rocker shafts.

Re: Improve oil to rocker boxes Triumph pre unit twins - 08/21, 2012, 4:11 am Posted By: triton thrasher

> **Originally Posted by Mattsta**
>
> The lower external oin drain bango bolts on the push rod tubes leak slightly on mine so there is definitely oil draining from the rocker boxes into the crankcase.

It's ironic that very little oil appears to go up there, but masses of it leaks out!

Re: Improve oil to rocker boxes Triumph pre unit twins - 08/21, 2012, 6:18 am Posted By: sonnehaerdt

I also used to squeeze manually the hole in the return pipe when starting.
Now the sqeezing is done automatically by the non return valve,the pressure is controlled and it works permanently.
The BSA B33 for instance initially had no oil feed to the rockers, the (hot) oil mist was supposed to travel up via the (rather big)push rod tunnel coming from the ditribution side. Needless to see this didn't work well at start with cold oil, hence the addition later on of a feed line from the scavenge (gear type) oil pump.

Re: Improve oil to rocker boxes Triumph pre unit twins - 08/21, 2012, 9:57 am Posted By: triton thrasher

> **Originally Posted by sonnehaerdt**
>
> The BSA B33 for instance initially had no oil feed to the rockers, the (hot) oil mist was supposed to travel up via the (rather big)push rod tunnel coming from the ditribution side. Needless to see this didn't work well at start with cold oil.

Never heard of it causing a problem to the owner. Have you?

Re: Improve oil to rocker boxes Triumph pre unit twins - Posted By: Trevor Stapp
08/21, 2012, 11:35 pm

I bent up a short length (50mm)of stranded clutch cable inner nad jamed that in the hole in the oil return tower inside the oil tank on my pre unit.
Seems to get enough oil to the rockers.
Also on startup I further restrict the return flow to forcce a bit extra to teh rocker boxes.
Only do this from dead cold if she hasn't been going for a week or so.

Cheers,
Trev

Re: Improve oil to rocker boxes Triumph pre unit twins - Posted By: triton thrasher
08/22, 2012, 12:45 am

> **Originally Posted by Trevor Stapp**
>
> I bent up a short length (50mm)of stranded clutch cable inner nad jamed that in the hole in the oil return tower inside the oil tank on my pre unit.

I hope there is absolutely no chance of cable strands ending up in the moving parts.

> **Quote**
>
> Seems to get enough oil to the rockers.

Meaning, I suppose, that the bike performs and behaves like a normal unmodified Triumph?

> **Quote**
>
> Also on startup I further restrict the return flow to forcce a bit extra to teh rocker boxes.
> Only do this from dead cold if she hasn't been going for a week or so.

That's fine if you like to add extra steps to your starting "ritual." Cold start is probably the time when the rockers get most oil, as the scavenge picks up the slug of oil from the bottom of the crankcase and pumps oil, before it starts pumping air.

Re: Improve oil to rocker boxes Triumph pre unit twins - Posted By: Pete R - R.I.P.
08/22, 2012, 3:00 am

> **Originally Posted by Trevor Stapp**

> I bent up a short length (50mm)of stranded clutch cable inner nad jamed that in the hole in the oil return tower inside the oil tank on my pre unit.
> Seems to get enough oil to the rockers.

I prefer to use a piece of coat-hanger wire (single strand).It will only increase rocker oil-flow by 25%,and pressure by about 56%.I suppose the increased pressure on the return pump consumes a little horsepower.

I don't do this because the spindles need more oil.They get about a teaspoon each per minute,which is plenty,and they never wear out.I do it to get a little more cooling oil to the head.1/2 teaspoon extra oil per minute is a drop in the ocean;I know.

Unless you've just washed all the oil off the spindles,they'd normally have enough oil on them for 5 minutes running with no further oil.

As long as you're not using valve-stem seals,the guides will get enough oil.I'd put most of the wear and tear on guides,stems and adjusters down to the very short rocker arms causing arcing and side-thrust.Even worse on a unit 500 or Trident,where the arms are 1/4" shorter (7/8" from spindle centre to valve stem,compared to 1-1/8").

Re: Improve oil to rocker boxes Triumph pre unit twins - Posted By: triton thrasher
08/22, 2012, 3:14 am

> **Originally Posted by Trevor Stapp**
>
> inner nad jammed that in the hole in the oil return tower

Sit further back, on bumpy roads.

Re: Improve oil to rocker boxes Triumph pre unit twins - Posted By: sonnehaerdt
08/22, 2012, 1:48 pm

> **Originally Posted by overandout**
>
> I think you're confusing B33's with C11's?

Yes, you are right it was the C11, but a similar thing was the case for the BSA pre-unit twins, there an oil feed to the rockers was introduced in the late forties (of last century).

Re: Improve oil to rocker boxes Triumph pre unit twins - 08/22, 2012, 2:29 pm Posted By: t120mike

triton thrasher, I thought nads were left and right, not inner and outer..... 😀

Go nad, go!

Re: Improve oil to rocker boxes Triumph pre unit twins - Posted By: triton thrasher

08/22, 2012, 2:35 pm

Originally Posted by t120mike

triton thrasher, I thought nads were left and right, not inner and outer..... 😀

Go nad, go!

You put your left nad in (to the froth tower)
You put your left nad out.

Re: Improve oil to rocker boxes Triumph pre unit twins - Posted By: Trevor Stapp
08/23, 2012, 12:37 am

Originally Posted by triton thrasher

Originally Posted by Trevor Stapp

I bent up a short length (50mm)of stranded clutch cable inner nad jamed that in the hole in the oil return tower inside the oil tank on my pre unit.

I hope there is absolutely no chance of cable strands ending up in the moving parts.

Nah Triton,fitted early Trident oil filter on the return line and bloody good filter on feed.

Quote

Seems to get enough oil to the rockers.

Meaning, I suppose, that the bike performs and behaves like a normal unmodified Triumph?

No need to modify the almighty twin seriously though in the tight twistys where Hinkley tossers fear to tread my old unmolestered Speed Twin takes a lot of beating.
All hail the mighty twin, all hail the twin.

Quote

Also on startup I further restrict the return flow to forcce a bit extra to teh rocker boxes. Only do this from dead cold if she hasn't been going for a week or so.

That's fine if you like to add extra steps to your starting "ritual." Cold start is probably the time when the rockers get most oil, as the scavenge picks up the slug of oil from the bottom of the crankcase and pumps oil, before it starts pumping air.

Never in a hurry on start up as our pubs and licensing laws are sophisticated, dont have to rush to beat the dinner time last bell.

Bollocks to you.....putt putt putt putt.

Todle pip all.

Re: Improve oil to rocker boxes Triumph pre unit twins - Posted By: sonnehaerdt
08/24, 2012, 3:14 pm

Originally Posted by Pete R

Originally Posted by Trevor Stapp

I bent up a short length (50mm)of stranded clutch cable inner nad jamed that in the hole in the oil return tower inside the oil tank on my pre unit.
Seems to get enough oil to the rockers.

I prefer to use a piece of coat-hanger wire (single strand).It will only increase rocker oil-flow by 25%,and pressure by about 56%.I suppose the increased pressure on the return pump consumes a little horsepower.

I don't do this because the spindles need more oil.They get about a teaspoon each per minute,which is plenty,and they never wear out.I do it to get a little more cooling oil to the head.1/2 teaspoon extra oil per minute is a drop in the ocean;I know.

Unless you've just washed all the oil off the spindles,they'd normally have enough oil on them for 5 minutes running with no further oil.

As long as you're not using valve-stem seals,the guides will get enough oil.I'd put most of the wear and tear on guides,stems and adjusters down to the very short rocker arms causing arcing and side-thrust.Even worse on a unit 500 or Trident,where the arms are 1/4" shorter (7/8" from spindle centre to valve stem,compared to 1-1/8").

This is all true, the real issue on the pre units is the amount of oil coming from the spindles to lubricate the valve clearance adjusters/valve tips and push rod upper parts. I am convinced this is marginal in the standard design and it is clear that a bit more pressure brings some more oil to these places with an excpected reduction of wear and tear.(to be proven after some more km's)

Re: Improve oil to rocker boxes Triumph pre unit twins - Posted By: HawaiianTiger
08/24, 2012, 7:52 pm

Triumph experimented with pressure fed top end oiling via the plug on the timing cover. I think it was with the Thruxton. With a little innovation you could even meter it. I've considered it myself, but with the short life of the Triumph top end otherwise, it didn't seem to make enough sense to spend all that time.
Bill

Re: Improve oil to rocker boxes Triumph pre unit twins - Posted By: sonnehaerdt
09/02, 2012, 2:23 pm

> **Originally Posted by HawaiianTiger**
>
> Triumph experimented with pressure fed top end oiling via the plug on the timing cover. I think it was with the Thruxton. With a little innovation you could even meter it. I've considered it myself, but with the short life of the Triumph top end otherwise, it didn't seem to make enough sense to spend all that time.
> Bill

Sounds interesting, do you know why it was not pursued?
I believe the plug on the timing cover directly communicates with the pump discharge.
You would also in that case need some form of pressure release/regulation as the plunger pump can reach (too) high pressure at the discharge side.
This is why I adjusted the pressure to the rocker spindles in the system I use at 0.7-1 bar(g)for the time being. I can easily increase or lower this pressure by changing the spring in the (non-return) check valve

Re: Improve oil to rocker boxes Triumph pre unit twins - Posted By: RF Whatley
09/03, 2012, 8:22 am

The spindle oil feed system of a pre-unit was exactly the same on unit construction up until around 1968-69 when they decided to stop drilling the oil way in the rocker arm itself. The drainage system is different on iron heads, but the feed was the exact same.

The reason the valve train wears so much is:
a) The poor design of the rocker arm geometry
b) Poor quality oils developed for water-cooled automobiles being used in much hotter air-cooled engines
c) No real oil filtration system

The small amount of oil present is more than enough to do the job. Oil is drawn by forces of nature into small clearances and heated areas. This force is called 'capillary action'. So all the oil system has to do is place the oil near the needed spot and the forces of nature do the rest. The oil leaks at the top end prove my point.

Consider that it wasn't until the late 1930's that oil was even pumped to the rocker arms, and it wasn't until the 1940's that engineers decided to capture that oil and return it to the engine.

Pumping more oil to the rockers is simply going to create more problems.... like how do you intend to drain the excess oil from the push rod tubes?

:bigt

PS. Attached below is a photo of a Norton Inter. You can plainly see the exposed hair-pin valve springs and valve gear. Please explain how these manage to last even though they violate every point of your theory.

Re: Improve oil to rocker boxes Triumph pre unit twins - Posted By: triton thrasher
09/03, 2012, 9:39 am

> **Originally Posted by sonnehaerdt**
>
> Sounds interesting, do you know why it was not pursued?

Pressure feed was tried on some very early Speed Twins, then dropped. I don't know why it was tried, or dropped!

Re: Improve oil to rocker boxes Triumph pre unit twins - Posted By: RF Whatley
09/03, 2012, 3:58 pm

Probably because all it did was rob the crank of oil pressure. Again, creating new problems where none previously existed.

Same thing happened when they tapped into the pressure line for the ex tappet oiler.

Re: Improve oil to rocker boxes Triumph pre unit twins - Posted By: sonnehaerdt
09/04, 2012, 11:06 am

Originally Posted by RF Whatley

The spindle oil feed system of a pre-unit was exactly the same on unit construction up until around 1968-69 when they decided to stop drilling the oil way in the rocker arm itself. The drainage system is different on iron heads, but the feed was the exact same.

The reason the valve train wears so much is:
a) The poor design of the rocker arm geometry
b) Poor quality oils developed for water-cooled automobiles being used in much hotter air-cooled engines
c) No real oil filtration system

The small amount of oil present is more than enough to do the job. Oil is drawn by forces of nature into small clearances and heated areas. This force is called 'capillary action'. So all the oil system has to do is place the oil near the needed spot and the forces of nature do the rest. The oil leaks at the top end prove my point.

Consider that it wasn't until the late 1930's that oil was even pumped to the rocker arms, and it wasn't until the 1940's that engineers decided to capture that oil and return it to the engine.

Pumping more oil to the rockers is simply going to create more problems.... like how do you intend to drain the excess oil from the push rod tubes?

:bigt

PS. Attached below is a photo of a Norton Inter. You can plainly see the exposed hair-pin valve springs and valve gear. Please explain how these manage to last even though they violate every point of your theory.

It is all a matter of (increased) engine performance in combination with life time of components.
Many (non-Bitish)bikes have a pressure feed to the top-end directly from the discharge of the oil pump to lubricate rockers/spindles, valve tips/adjusters and valve stems.
My 1955 T100 (and I think many other pre-units) have no oil ways in the rockers leading to the valve tips/adjusters, so these are totally depending on the oil seeping from the clearance between spindles and rockers and flung around by the motion of these components, no capillary action can bring oil to valve tips and stems.
The push rod tubes can easily handle the approx. double oil flow corresponding with ca. 1 barg feed pressure.
Now at least I can see oil at the adjusters, where before installing the pressure control, there was hardly anything to be seen.

Re: Improve oil to rocker boxes Triumph pre unit twins - Posted By: triton thrasher
09/04, 2012, 12:14 pm

The valve tips are oily when the engine is running. If they were submerged in gallons of oil the lubrication effect would be much the same. Heads with a lot of oil need valve stem seals to hold the oil back. The main potential benefit from extra oil would be cooling. I don't think you'll see any such benefit, but the potential must be there!

If you want long lasting valves and guides, avoid low priced pattern (or even original) parts. Get modern items, such as Kibblewhite.

Re: Improve oil to rocker boxes Triumph pre unit twins - Posted By: triton thrasher
09/04, 2012, 12:24 pm

Originally Posted by sonnehaerdt

> Many (non-Bitish)bikes have a pressure feed to the top-end directly from the discharge of the oil pump to lubricate rockers/spindles, valve tips/adjusters and valve stems.

Modern OHC designs need pressurised lubrication.

Quote

> Now at least I can see oil at the adjusters, where before installing the pressure control, there was hardly anything to be seen.

That may improve your valve watching experience more than it does your riding experience. Good luck and everything, but I strongly suspect that, if your modifications "work" by putting much more oil up

there, it will do more harm than good. Keep us informed, please.

Re: Improve oil to rocker boxes Triumph pre unit twins - Posted By: John Healy
09/04, 2012, 12:44 pm

sonnehaerdt:

To your point did you use a good quality assembly lube on the valve tip/adjuster face during assembly?

You didn't happen to test turn over the engine during assembly without any oil on the valve tip/adjuster face?

All the pressure increase available will not overcome the fact that on 1969 and later 650 rocker shafts there is no way for the oil to be distributed to the push rod or valve tip! Then in 1973, when they finally cut a spiral the length of the shaft did the oil have a path out of the center of the rocker, but the wrong placement of the spring washer insured that the valve tips continued to get little, if any lubrication.

The lubrication on the 1969-1972 650 models was not that much different than the exposed valve spring Norton pictured above.

Re: Improve oil to rocker boxes Triumph pre unit twins - Posted By: sonnehaerdt
09/11, 2012, 9:06 am

Hello John,

I use a stuff called TSL in concentrated form and pour some oil (Penrite classic 30)on top of the valve tips/adjusters/rocker arms before moving any part and boxing up (knowing it takes some time for the oil to reach these places after starting).

The whole top lubrication system looks marginal to me compared to some other (non British) makes of the same aera (fifties/sixties).So this explains in my opinion the frequent adjustements and rather fast wear.
Another probable reason why this nevertheless functions reasonably is the fact that when the engine is hot there is some oil mist/vapour around.
One more thing that could play a (negative) role is that the oil scavening pump has a bigger capacity then the supply pump, hence the bubbles in the oil return system. Once a put a clear hose to the rocker spindles and it was evident that there is oil and bubbles going slowly up there.
I will now wait and see whether my improvement brings something on the long term (say some 5000Km)

Re: Improve oil to rocker boxes Triumph pre unit twins - 09/11, 2012, 4:49 pmPosted By: John Healy

Take a long look at the relationship between the hole in the rocker arm and the turned down section of the rocker shaft. What do you see?

Re: Improve oil to rocker boxes Triumph pre unit twins - 09/12, 2012, 8:31 amPosted By: John Healy

Have you looked yet? Trace the path of the oil. How does the oil get from the turned section of the rocker shaft to the hole in the rocker.

How will all of your extra oil flow, and get out the ends of the rocker arm?

Re: Improve oil to rocker boxes Triumph pre unit twins - 09/12, 2012, 8:31 amPosted By: John Healy

What did they do in 1973 to improve oil flow to the top end?

Re: Improve oil to rocker boxes Triumph pre unit twins - Posted By: sonnehaerdt
09/23, 2012, 12:17 pm

It is simply a matter of hydraulics: if you increase the pressure with a factor 4 (so from about 0.25 bar to 1 bar)the flow through a given restriction (the clearance between rocker shaft and spindle) will be twice. Nevertheless two times a very little amount is still rather little (but visible).

Re: Improve oil to rocker boxes Triumph pre unit twins - Posted By: triton thrasher
09/23, 2012, 12:24 pm

Put a tank of fuel through your bike at full throttle, then let it idle for an hour, then tell us your system works.

Re: Improve oil to rocker boxes Triumph pre unit twins - 09/23, 2012, 5:55 pmPosted By: John Healy

sonnehaerdt:

What did Triumph do to increase flow with the introduction of the T140? Hint, they didn't increase the pressure...

Re: Improve oil to rocker boxes Triumph pre unit twins - 09/24, 2012, 4:25 pmPosted By: John Healy

In the development of the Triple, changes were made to increase the flow of oil to the rocker box. The traditional drilled rocker arm was abandoned. The drilling is actually blocked by the rocker shaft. The hole has very restricted access to the oil galley formed by the reduced diameter of the rocker shaft. It is limited by the amount of oil that will pass the .001" clearance the rocker has on the shaft.

What replaced it the original rocker was one with no hole. The ends of the rocker arm eere chamfered to create an oil galley, and a slot milled to allow the oil to flow down the side of each arm of the rocker. The order of the outer thrust washers were reversed placing the flat spring next to the rocker and the spring next to the rocker box. A slot was then cut the length of the rocker shaft to provide a place for the oil to flow along the shaft and out to the ends of the rocker. This put enough oil out the rocker box to require the guides be fit with valve guide seals. There is a bit more to it, but that is the idea. So it was to be for the triple.

The rocker box you are working on has no provision for the oil by-passed from the return oil line to flow any where, at least in any quantity. If you remove the dome nut retaining the over head oil line you will flood the top of the engine with oil. But with the dome nut tightened on very little makes it into the box itself. There is just too much restriction to allow it to happen. There is enough oil to keep the rocker arms from seizing to the rocker shafts, but little else.

To make things worse, the hole in the rocker arm that is supposed to feed oil to the push rod cup doesn't even open into the oil galley formed by the turned down section of the rocker shaft. What little oil that gets to the rocker arm has to pass through the .001" clearance between the shaft and the rocker. Just lengthening the galley, so that the rocker hole has direct access, would do a lot to increase oil flow.

So move ahead to the time when the guys at Umberslade Hall were developing the triple. That was when a group of "whiz kid" engineers, fresh out of school, were in charge of engineering. They must have looked at this and thought they could do better. The new rocker arms developed had the oil hole omitted. The inside edge of the rockers were chamfered for oil passage, a groove cut, to allow directional flow, cut into the side of the rocker body and a slot cut in the rocker shaft itself so oil could flow to both ends. They then reversed the flat and thackery washers with the flat washer helping direct oil toward the valve tip and push rod cup.

In and around the same time they must of thought that this would be an improvement on the 650 twin.

The new rocker arm design found its way into production, but without the grooved rocker shaft and the washers remained as they had been for 30 years. Actually when you think about it, on the twin it was a step backward. The 650 twins remained in this condition until the introduction of the T140/TR7. They finally cut a spiral groove in the rocker shaft. Alas though, those clever lads on the assembly line still got the thrust washer and thackery reversed. What did those kids know any how? "We have been doing it this way for 40 years!"

So if you want more oil to flow through the rockers, either lengthen the oil galley on the rocker shaft or get a set of T140 rocker shafts (or cut a groove in you old shaft) and reverse the thrust washer and thackery. If you choose to use your old rocker arms you will have to grind a chamfer in the end faces of the rocker and cut a small path to direct the oil toward the valve and push rod.

There, I think this reads better...
John

Re: Improve oil to rocker boxes Triumph pre unit twins - Posted By: sonnehaerdt
09/29, 2012, 1:45 pm

Thanks for this extensive explication.
It confirms that pre units (like my 1955 T100)and some later models for rocker ball pins and valve tips/adjusters lubrication totally depend on the oil coming from between the spindles and the rocker.
Of course having appropriate oil ways in spindles and rockers as later developed (I assume for good reasons)as you described would be the ideal modification.
However this takes more time and cost than simply increasing the pressure a bit the way I did.
(Most likely the clearance between the spindle and the rocker is a bit more than 0.001" on my old machine, so the oil comes out somewhat more easy).
Anyhow I consider it better than restricting the hole in the return pipe in the oil tank by a piece of wire, a temporary thump or alike. On top of that there is always a minimum pressure of 0.7 bar regardless the rev's (the pressure build up via the hole at low rev's is very low)
So far it works fine.

Re: Improve oil to rocker boxes Triumph pre unit twins - 09/30, 2012, 6:14 amPosted By: John Healy

So now you need modify your shaft and rocker arms, or find a set of used T140 shafts and rockers to replace the one you have now. You might as well increase the flow, which will reduce the chances for an oil leak at a higher pressure. This will give you a real increase in flow of oil to the rocker box.

Re: Improve oil to rocker boxes Triumph pre unit twins - Posted By: sonnehaerdt
10/05, 2012, 1:02 pm

> **Originally Posted by John Healy**
>
> So now you need modify your shaft and rocker arms, or find a set of used T140 shafts and rockers to replace the one you have now. You might as well increase the flow, which will reduce the chances for an oil leak at a higher pressure. This will give you a real increase in flow of oil to the rocker box.

No need for that, I am happy the way it functions right now: no leaks and sufficient oil.

Re: Improve oil to rocker boxes Triumph pre unit twins - Posted By: triton thrasher

10/05, 2012, 2:15 pm

> **Originally Posted by sonnehaerdt**
>
> I am happy the way it functions right now: no leaks and sufficient oil.

That's what mine's like too. That's with no modification.

We're all happy as a sandbag.

Re: Improve oil to rocker boxes Triumph pre unit twins - Posted By: perfect.tommy
01/07, 2019, 11:06 pm

Will a T140 shaft fit a 650 rocker box (assuming you use the UNF acorn nut)?

Re: Improve oil to rocker boxes Triumph pre unit twins - Posted By: JubeePrince
01/08, 2019, 9:38 am

> **Originally Posted by perfect.tommy**
>
> Will a T140 shaft fit a 650 rocker box (assuming you use the UNF acorn nut)?

Yes.

If the rocker arms are drilled, use the existing thackery and thrust washer setup. If the rocker arms are solid with the machined divot, you need four (4) thrust washers with 1/2" ID assembled in the correct sequence with the thackerys.

Steve

Re: Improve oil to rocker boxes Triumph pre unit twins - 08/25, 2020, 12:37 pm Posted By: MikeJ

I so appreciated this thread, especially John Healy's insights and recommendations, that I tried to synthesize it into two useful pages that I could hyperlink to my parts catalogues. So, sharing this link to my PDF here thinking this might be a useful reference for other folks as well.

https://drive.google.com/file/d/1HXx6CAx_BrjJNpx-5iYmN4N-OIXTNIO3/view?usp=sharing (Link: https://drive.google.com/file/d/1HXx6CAx_BrjJNpx-5iYmN4N-OIXTNIO3/view?usp=sharing)

Re: Improve oil to rocker boxes Triumph pre unit twins - Posted By: Stein Roger
08/25, 2020, 11:30 pm

Thanks for sharing Mike, I've saved the PDF in my Tech Files.
I've done the shim re-arrangement for many years now, since I first learned about it.
Wish I had known about it in my younger days, when I rode my 71 Bonnie around 100.000 miles... 😁
But seriously, I did experience squeaky valve gear at times, and valve and guide wear. I now believe that a correct shim arrangement, and scrolled rocker shafts would have eased these issues.

SR

Re: Improve oil to rocker boxes Triumph pre unit twins - 08/26, 2020, 11:34 am Posted By: MikeJ

Originally Posted by MikeJ

I so appreciated this thread, especially John Healy's insights and recommendations, that I tried to synthesize it into two useful pages that I could hyperlink to my parts catalogues. So, sharing this link to my PDF here thinking this might be a useful reference for other folks as well.

https://drive.google.com/file/d/1HXx6CAx_BrjJNpx-5iYmN4N-OIXTNIO3/view?usp=sharing
(Link: https://drive.google.com/file/d/1HXx6CAx_BrjJNpx-5iYmN4N-OIXTNIO3/view?usp=sharing)

I have updated Page 2 of this PDF to expand upon the need for a grooved spindle to ensure adequate oiling. I didn't want Page 2 taken alone to mislead anyone to thinking that the correct placement of the washers alone would provide adequate oil to the top end parts.
Mike

Britbike forum

Calling John Healey or someone that can answer. - 11/10, 2013, 4:57 pm Posted By: Chris R

John, Thank you for all the info I have gleaned from your posts. I shipped my head today to Memphis motor werks to let Leo do his magic. So with that said, I wanted to ask you a few questions about putting later rocker parts in my 1970 rocker boxes. I have a line on a set of 1973 T140 complete rocker boxes. Can I transfer the internal parts into my 1970 boxes? I believe the 1973 and later have the spiral cut rocker shaft. So should I transfer the parts in the same order? I read one of your posts and you said something about adding two more factory washers. Any help is much appreciated. Thanks, Chris

Re: Calling John Healey or someone that can answer. - 11/11, 2013, 2:30 am Posted By: JubeePrince

> **Originally Posted by Chris R**
>
> Can I transfer the internal parts into my 1970 boxes? I believe the 1973 and later have the spiral cut rocker shaft. So should I transfer the parts in the same order? I read one of your posts and you said something about adding two more factory washers. Any help is much appreciated. Thanks, Chris

Hi Chris,

Yes you can. Some things to note:

A number of these were assembled incorrectly using six (three per box) thrust washers with I.D. of 1/2" (70-1575) and two (one per box) thrust washer with I.D. of 3/8" (70-1330). This set up puts the spring washers against the rocker arms and prohibits oil flow out of the machined divots in the arms.

You need to swap the placement of the spring washer and thrust washer. You need to ditch the two 3/8" washers and replace with two more of the 1/2" washers. This will allow the "step" on the shaft to clear the washer when you swap the spring and thrust washers.

This was the incorrect assembly:

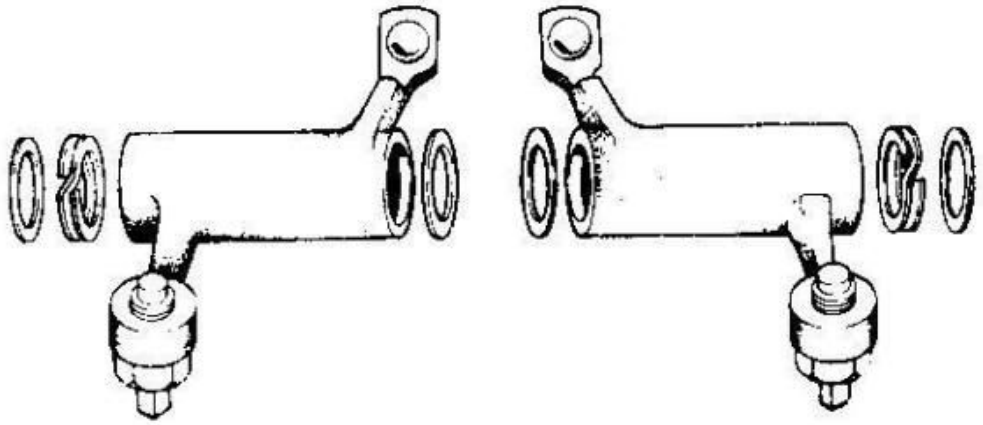

This is the correct assembly:

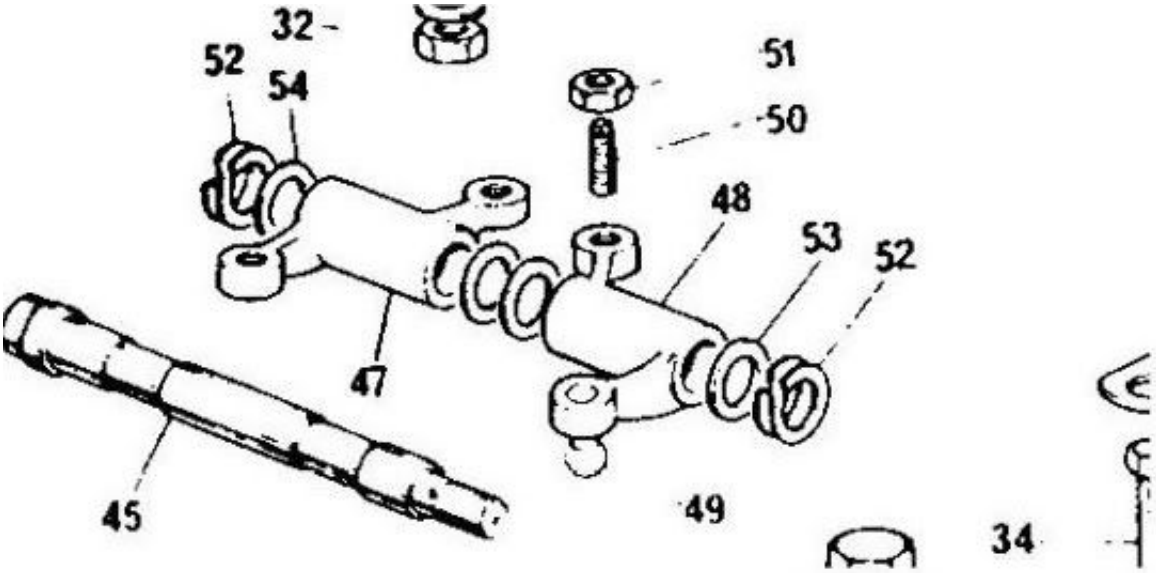

Note in the second illustration that part #54 (3/8") is labeled incorrectly and should read part #53 (1/2"). (Not to mention that the thrust washers are labeled backwards relative to the shaft orientation, but that's another can of worms!)

Finally, be sure you have later dome nuts too (UNF thread). I think the earlier spindles had CEI threads, but not sure when that change occured...I'm sure someone will chime in with that info.

HTH,

Steve

Re: Calling John Healey or someone that can answer. - 11/11, 2013, 12:42 pm Posted By: desco

http://www.britbike.com/forums/ubbthreads.php?ubb=showflat&Number=344618#Post344618 (Link: http://www.britbike.com/forums/ubbthreads.php?ubb=showflat&Number=344618#Post344618)

Try this.

Re: Calling John Healey or someone that can answer. - 11/11, 2013, 1:13 pm Posted By: Chris R

Thank you Gentlemen!

Re: Calling John Healey or someone that can answer. - 11/12, 2013, 12:45 am Posted By: T140V-Rich

Pardon the interuption. Steve, the latter illustration with the spring washer on the outside, scrap the smaller washer to clear the step/shoulder on the shaft is the correct set up?

Ugh. I puzzled over those very two illustrations, finally deciding on the former since mine came apart that way.

I'll take them down again. I have a dowel for correct alignment. The worst part was getting the o-ring to go in without shearing. At the recommendation of a friend, I bought some uh, lube, at ...a...business that's not an auto parts store, and leave it at that.

It worked, btw.

Cheers

Richard

Re: Calling John Healey or someone that can answer. - 11/12, 2013, 1:14 am Posted By: scott67TT

Correct assembly is the first arrangement shown. Thackeray washers go next to the rockers and washers go against the aluminum housing.

Re: Calling John Healey or someone that can answer. - 11/12, 2013, 2:36 am Posted By: John Healy

Scott. I think if you look at the history of this change that took place in 1969, the model that it was first introduced on and what did and didn't happen you will come to a different conclusion. The non-drilled rockers, with their "cut" ends, came out of design changes made to the Trident at Umberslade Hall.

Beside the new rocker arms the changes included a new rocker shaft with an oil groove to allow oil to migrate to the end of the rocker shafts, and a change in the positioning of the flat and Thackerey washers. While Meriden got the new rocker arms, the rest of the changes, including the oil groove in the shaft, and the change in the washers were not made. This dramatically decreased the flow of oil to the top-end. With the introduction of the 1973 750 twin models Meriden finally put a spiral cut in the shaft to allow more oil to flow. This was an improvement as far as it went. The ends of the Thackerey washers still found their way into the cuts on the side of the rocker and diverted the flow of oil away from the pushrod cup and valve tip.

Re: Calling John Healey or someone that can answer. - 11/12, 2013, 3:28 am Posted By: scott67TT

Let me see if I have this right.

There are two different types of rockers, one is drilled and the other has a cut end, or what I would call a notch?

The Thackeray washers are correctly installed against the drilled rocker on the outboard end of the rocker and

for the cut or notched rockers the Thackerays are swapped with their respective washers and are installed against the rocker box housing?

I just sold a mutt of a Triumph for $2850 and I made $10,200.
$200 profit and a $10,000 education.

My education continues...

Re: Calling John Healey or someone that can answer. - 11/12, 2013, 5:24 am Posted By: JubeePrince

> **Originally Posted by scott67TT**
>
> There are two different types of rockers, one is drilled and the other has a cut end, or what I would call a notch?
>
> The Thackeray washers are correctly installed against the drilled rocker on the outboard end of the rocker and
>
> for the cut or notched rockers the Thackerays are swapped with their respective washers and are installed against the rocker box housing?

Correct.

My education continues daily!

Cheers,

Steve

Re: Calling John Healey or someone that can answer. - 11/12, 2013, 5:25 am Posted By: JubeePrince

> **Originally Posted by T140V-Rich**
>
> Pardon the interuption. Steve, the latter illustration with the spring washer on the outside, scrap the smaller washer to clear the step/shoulder on the shaft is the correct set up?

For your '73: yes.

Cheers,

Steve

Re: Calling John Healey or someone that can answer. - 11/13, 2013, 12:05 am Posted By: scott67TT

So the factory never installed the spring washers against the rocker housings after the change went into effect for the twins?

Did the Tridents have the spring washers installed against the rocker housings?

Re: Calling John Healey or someone that can answer. - 11/13, 2013, 2:35 am Posted By: John Healy

Scott, while they finally adopted the grooved shaft with the 1973 T140 Meriden never did put the flat washers against the rockers.

It wasn't until 1985, and the Harris Bonneville, did Brian Jones finally place the flat washer against the rocker arm.

Tridents always had the flat washers against the rockers.

Re: Calling John Healey or someone that can answer. - 11/13, 2013, 3:24 am Posted By: scott67TT

Somehow the Hippy Dippy Weatherman must figure in to all of this...my next twin rocker box rebuild with notched rocker arms will have the change but I'm a little hesitant...uhhh...light increasing in the morning hours...beer was invented before motorcycles, make of that what you will

Re: Calling John Healey or someone that can answer. - 11/13, 2013, 6:02 am Posted By: T140V-Rich

Mine have to come back down. I've got the placement of the first illustration. Timely topic.

Again, pardon the interruption. But thanks for allowing me to interject a query or two.

Cheers

Richard

Re: Calling John Healey or someone that can answer. - 11/13, 2013, 6:32 am Posted By: John Healy

> **Quote**
>
> Somehow the Hippy Dippy Weatherman must figure in to all of this.

No, you would have to understand the relationship between BSA, and their development group at Umberslade Hall, and the folks at Meriden. One company and divisions that tiu would have thought came from different planets.

Re: Calling John Healey or someone that can answer. - 11/13, 2013, 6:33 am Posted By: scott67TT

Looking at the 1975 Trident parts manual shows the outboard spring washers up against the rockers... I guess things were pretty confusing at the old plant in those days. If I could lose my jed clampett accent, I would have fit right in.

Re: Calling John Healey or someone that can answer. - 11/13, 2013, 7:07 am Posted By: Allan G

Think it has been said before that parts manuals were not designed as restoration manuals (very true in case of bsa) sometimes the images or info on the plates can be plain wrong, missing something or shown in what looks like the wrong place. How many times have you gone through a basket case, buying parts that you haven't realised is certain parts looming at the bottom of a box. It's only when the part arrives you go... Oh yer

Re: Calling John Healey or someone that can answer. - 11/13, 2013, 8:13 am Posted By: John Healy

The 1975 T160 Trident Manuals and parts books are "Horses of a different color".

While it is true the T160 parts book clearly illustrates what you said, the workshop manual clearly show the washers next to the rocker arms. Remember, it was Norton that was responsible for the T160 and neither Meriden or BSA management had anything to do with it.

To organize all this in your mind you must be able to disconnect illustrations and applications from the intent of original design. The original design worked. It provided a lot more oil to the top end than earlier iterations.

Re: Calling John Healey or someone that can answer. - 11/13, 2013, 12:40 pm Posted By: DavidP

So, the illustration in the A65 workshop manual is wrong?
It shows the spring washers next to the rockers, flat washers to the outside.
My '74 T150v parts book shows the plain washers next to rockers.

Re: Calling John Healey or someone that can answer. - 11/13, 2013, 2:04 pm Posted By: desco

In 1971 it was not wrong. Later on they found a better way to do it.

Re: Calling John Healey or someone that can answer. - 11/13, 2013, 8:21 pm Posted By: Stuart

Hi Scott,

> **Originally Posted by scott67TT**
>
> Looking at the 1975 Trident parts manual
> I guess things were pretty confusing at the old plant in those days.

Nope, 'fraid just the T160 parts manual is wrong.

The T160 head/rocker box drawing is an adaptation of the T150 drawing, used in all the T150 parts manuals from 1968 to 1974. Whoever did the original drawing hedged his bets, with various arrangements of plain and Thackeray washers at each rocker; however, certainly from 1970 to 1974, the order of bits is shown correctly at the ends of the exhaust spindle and the drive-side end of the inlet spindle, ... but, for some reason, the order at just the timing-side end of the inlet spindle was never changed.

When the T160 manual was prepared, because the rocker feed pipes had more bits, the decision was made to remove all the rocker feed bits from the head/rocker box picture and list. At the same time, someone took it upon himself to change the order of the bits at ends of the rocker spindles; unfortunately, rather than note that three were the same and only one was different, and check with the workshop manual, the only incorrect end was copied to the other three! Duh!

To echo Allan, parts books were intended for factory and dealer staff to identify parts, not as assembly instructions; that's what workshop manuals are for (even if they aren't always correct either).

Hth.

Regards,

Re: Calling John Healey or someone that can answer. - 11/13, 2013, 8:26 pm Posted By: Stuart

Hi John,

> **Originally Posted by John Healy**
>
> it was Norton that was responsible for the T160

Ye-ea-ah ... like, as you've got grand-kids, you're "responsible" for your kids.

The T160 parts book doesn't have a publication date but it's recognizably in the Small Heath format, rather than the Meriden format, and I don't recall any problem getting one after I got my first T160 in 1977.

Otoh, the T160 Workshop manual wasn't available for years afterwards - I remember buying my (bound) copy out of the boot of Les Williams's car at a TR3OC AGM at the Coventry Museum of Transport, so that'd be about 1981. By then, was there any part of "Norton" that gave a monkey's about the T160? I suspect that, had it not been for John Nelson (who compiled it), we wouldn't have a T160 workshop manual now.

Hth.

Regards,

Re: Calling John Healey or someone that can answer. - 11/14, 2013, 2:49 am Posted By: John Healy

> **Quote**
>
> So, the illustration in the A65 workshop manual is wrong?

BSA is "another kettle of fish". What we are talking about refers to Triumph twins and triples from mid-1969.

Re: Calling John Healey or someone that can answer. - 11/16, 2013, 12:45 am Posted By: T140V-Rich

Not to interrupt the "Who's your granddaddy" line of thought, but I think this contributes to those in possession of lesser lineage knowledge.

I've now swapped out, successfully I might add, which is saying something, the spring and flat washers that were in question inside the rocker boxes.

First observation is that with the flat washers against the arm and the spring washer against the housing, oil should be "encouraged" to travel from the inside of the arm and eventually onto the valve tip via a tiny opening on the shoulder of the arm now enclosed with a flat washer.

If swapped, spring washer inside, the oil would be allowed to go anywhere gravity so chose.

Second, with the spring washer now outside, getting it to go into place is something I liken to, oh, I don't know, trying to put a cat into a toilet - it will cling to any and everything in sight before considering going where you want it. The open ends of the spring washer act as claws to grab everything.

Just a word of warning. Your 7/16ths dowel for alignment of the various washers/rocker arms, a tiny screwdriver and the patience of Job are requirements for this particular task.

Also, ensure your last spring washer in line is in fact aligned. Mine got pinned between the arm and housing due to initial misalignment, halting the forward progress of the spindle and giving the washer what I call "fish head" (squeezed pretty flat, IOW).

And now back to our regularly scheduled programming, "Who's your granddaddy?" 😁

Cheers, lads. Very timely as I was just closing this section up on on resto.

Richard

Britbike forum

Rocker shafts - uncertainty! - 01/18, 2016, 11:35 am Posted By: Gregrsv

Guys
I have a bit of a bits T120 , around 1970 age. I've got the head off just now , grinding valves and doing pushrod seals etc. Ive ran it for a bout a year and a half with no issues , but I've noticed black oil residue inside the rocker boxes , and i also noticed the rockers have solid washers fitted and no tracery washers fitted. there is a slight end float in the rockers , and also the rockers are the later notched type.
I fitted the rocker feed pipe to the banjo connections and pumped the feed pipe with an oil can , i was overcoming the plunger in the oil can trying to get oil to flow out between the rocker shafts and the rockers!
Looking at the various posts on various forums i've noted all the changes over the years, but i kind of got lost in the bit where the rockers were notched and shim was put against the rocker , i understand the oil will come out at the notch and probably drip off the washer or rocker arm, but should i have rocker shafts with a helical groove to let the oil pass between shaft and rocker easier ??
sorry if this has been covered multiple times, I'm just trying to make sure its right i may do Moto giro with this bike in the summer!
cheers
greg

Re: Rocker shafts - uncertainty! - 01/18, 2016, 1:40 pm Posted By: Zombie

Hi Mr. Greg,

I'm building a '70 T120, and asked the same questions.
Here is the long version of the reply that I have saved into a build folder.
It's all the info you will need on this topic.

"Rocker washers:
I made this change as well.....from what I recall on a thread I had here last year, John H. recommended placing the thackery washers on the outside of the assembly (next to the rocker box wall). AIUI, when Triumph made the change from the drilled arms to the machined ones, this assembly order was changed but the drawings were not updated.

All the pressure increase available will not overcome the fact that on 1969 and later 650 rocker shafts there is no way for the oil to be distributed to the push rod or valve tip! Then in 1973, when they finally cut a spiral the length of the shaft did the oil have a path out of the center of the rocker, but the wrong placement of the spring washer insured that the valve tips continued to get little, if any lubrication.

So,how have you got the shims and thackeray washers installed?
Drilled rocker arms have the thackeray up against the arm,and the thrust washer against the rocker box casting.
Undrilled rocker arms should have the thrust washer against the arm,and the thackeray against the rocker box.
This is often done wrong,and was for many years.It affects lubrication of the rockers,valve-tips etc.
Here is the short version: Mr. Healey
"So if you want more oil to flow through the rockers, either lengthen the oil galley on the rocker shaft or get a set of T140 rocker shafts (or cut a groove in you old shaft) and reverse the thrust washer and thackery. If you choose to use your old rocker arms you will have to grind a chamfer in the end faces of the rocker and cut a small path to direct the oil toward the valve and push rod.

There, I think this reads better...
John

And here is the thread... http://www.britbike.com/forums/ubbthreads.php?

ubb=showflat&Number=455760&page=1 (Link: http://www.britbike.com/forums/ubbthreads.php?ubb=showflat&Number=455760&page=1)

In order for the tapered spindle to seat properly with this change, you need to replace the 3/8" (70-1330) thrust washers with the 1/2" (70-1575).

Oil Return ByPass:
It might be interesting to note that the stock little Triumph plunger pump will deliver by-pass pressure at far less than 2 thousand rpm. Especially when the motor is cold.

As a matter of course when installing a fresh motor, and rollers are not available, we remove the spark plugs, put the bike in high gear, and turn the motor over by hand using the rear wheel. We do this with a pressure guage attached to the oil galley in the front of the motor. It takes a couple minutes of turning, but it is easy to get the pressure guage up to 70 pounds. This insures full oil pressure to the rod bearings at start-up. To make the job easier we pre-fill all of the oil lines as we offer them to the bike.

It is common practice in the auto engine rebuild business to pressure pre-lube the motor before start-up. This ensures the cam and rod bearings have oil pressure before the motor turns over. The practice of starting the motor and waiting for oil presure to build almost guarantees some rod bearing damage even before you start using the motor.

The oil pressure by-pass holes in a typical Triumph, there are two, will more than handle the volume produced by a stock Triumph pump. The by-pass oil is diverted through two small holes. One into the timing gear cavity and the other into the crankcase it self. I have not know, or heard, of these holes becoming blocked in a Triumph motor.

When you fit a high volume pump, like the Morgo rotary, you HAVE TO increase the size of the by-pass holes to handle the inceased volume or risk inverting the oil seal on the end of the crankshaft. For all, but the very brave who will try to open up the hole leading to the crankcase without taking the motor apart, it means total engine dismantling.

The catch for the performance minded is: you are now introducing more oil into the crankcase and there is volumes written about oil and flywheels. To avoid this, you will see that a lot of Triumphs at the track with an additional oil line running from underneath the oil by-pass valve back to the oil tank. The two by-pass holes are welded up, a .015" hole drilled through the weld into the timing cover to spray lubricate the timing gears, and the oil diverted back to the oil tank.

Diverting the oil away from the crankcase is not a new idea in the Triumph world! If you look at many of the very early twin crankcases you will see a boss in the crankcase casting just below the by-pass valve. To convert a modern Triumph crankcase a boss would have to be welded on.

You can also modify the body of the by-pass valve. Grind a groove in the body so that when the by-pass valve is fully open it exposes the groove. This runs the oil by the side of the valve into the cavity that holds the spring. The oil by-pass body acorn cover can be modified to hold an oil line giving the by-passed oil a path back to the oil tank.

Jack Wilson, Big D Cycle, claimed that on the dyno they would consistantly see an additional 1 hp when the oil was diverted away from the crankcase directly back to the oil tank. Who knows, you would probably see more if the bike was fitted with a rotary pump.
John"

Lots of good info there...

Re: Rocker shafts - uncertainty! - 01/18, 2016, 1:59 pm Posted By: reverb

...all we know about what Mr J. Healy says about the rocker shaft; however, I still never saw a later Triumph with this change...
Also I dismantled 2 78s and 2 79s; all had the shaft and washers like the manual not like Mr Healy says, so I still wonder when they decided to make the change, in the 80s?!
Plus, I always heard that something like those spring washer against to Aluminum is a candidate to wear away the aluminum

Re: Rocker shafts - uncertainty! - 01/18, 2016, 3:35 pm Posted By: Zombie

> **Originally Posted by reverb**
>
> I always heard that something like those spring washer against to Aluminum is a candidate to wear away the aluminum

I completely agree with you.
I believe there should be a thin (0.010"-0.020") shim between the housing, and the Thackery washer.

This mainly comes down to common sense. You need the oil to have escape routes in specific places.

The areas where the shaft is in a bushing, the tops of the pushrods, and in a place to feed the tappet end of the valve.

I have considered turning down the boss ends of a new set of rocker shafts, and installing a welded, side drilled thrust type washer in place of the thackery/plain washers, and a positive pressure feed direct off the oil pump.
While some will argue that these engines have lasted 50 years as is, I argue that they can still be improved.

Someone here stated that they were curious as to what these engines could have become if they continued to develop them.
I like that train of thought.

Re: Rocker shafts - uncertainty! - 01/18, 2016, 4:44 pm Posted By: reverb

...I thought about shims but I did not found shims with that internal diameter, I did not found shims for the crankshaft too.

Re: Rocker shafts - uncertainty! - 01/18, 2016, 4:50 pm Posted By: Tridentman

Just a quick note---for racing it is common practice to leave out the Thackeray washer and put in an aluminum spacer of a thickness just to give a running clearance.
This eliminates the friction between the Thackeray washer and the rocker box etc.
The Thackeray washer is after all just a cheap way of positioning the rockers on the rocker shafts.
HTH

Re: Rocker shafts - uncertainty! - 01/18, 2016, 7:43 pm Posted By: triton thrasher

> **Originally Posted by Tridentman**

> Just a quick note---for racing it is common practice to leave out the Thackeray washer and put in an aluminum spacer of a thickness just to give a running clearance.
> This eliminates the friction between the Thackeray washer and the rocker box etc.

Common enough practice, but did it do any good?

Re: Rocker shafts - uncertainty! - 01/18, 2016, 10:51 pm Posted By: Gregrsv

Thanks guys
my bike looks as though someone has done the spacer modification as described by trident man. Today i'll trip out the rocker shafts and see if i can improve the oil path along the shaft, the clearance between shaft and rocker is maybe just a bit close for squeezing oil through , but with 4 rockers connected to one oil can i thought i'd manage to see oil somewhere!
cheers
greg

Re: Rocker shafts - uncertainty! - 01/19, 2016, 1:50 am Posted By: Tridentman

TT--less friction = more power to the back wheel.
I would agree--not a lot--but in racing every little bit counts.

Re: Rocker shafts - uncertainty! - 01/19, 2016, 1:51 am Posted By: JubeePrince

> **Originally Posted by reverb**
>
> Plus, I always heard that something like those spring washer against to Aluminum is a candidate to wear away the aluminum

And yet we NEVER see any pictures of these "worn" rocker boxes or tales of bits of aluminum in the sump? And what about all the T150's/T160's that were assembled properly? Do they have worn rocker boxes too?

With everything coated in oil, the rocker arms and thrust washers are going to be moving freely. The thackery washer, under tension, would remain stationary between the thrust washers and rockerboxes.

Not trying to be a PIA here, I just think the fear of catastrophe from this is way over-rated.

Steve

Re: Rocker shafts - uncertainty! - 01/19, 2016, 2:32 am Posted By: Hillbilly bike

> **Originally Posted by Tridentman**
>
> TT--less friction = more power to the back wheel.
> I would agree--not a lot--but in racing every little bit counts.

I think the washers could break in a racing engine..Shimmed in place might be better to control the rockers from walking back and forth if Triumph rockers do that sort of thing...I think my LSR Triumph still has the spring washers..Or not, can't remember what I did... But it goes fast...

Re: Rocker shafts - uncertainty! - 01/19, 2016, 2:43 am Posted By: Tridentman

They are more spacers than washers--they effectively replace the Thackeray washers so are quite thick.
Not much chance of breakage--and they have been used in dozens of Triumph racing engines to my knowledge with no failures of the spacer at all.
Not suggesting that the reduction in friction is large but as you know when preparing a racing engine you do all the little bits like this---they all add up.

Re: Rocker shafts - uncertainty! - 01/19, 2016, 3:01 am Posted By: Hillbilly bike

> **Originally Posted by Tridentman**
>
> They are more spacers than washers--they effectively replace the Thackeray washers so are quite thick.
> Not much chance of breakage--and they have been used in dozens of Triumph racing engines to my knowledge with no failures of the spacer at all.
> Not suggesting that the reduction in friction is large but as you know when preparing a racing engine you do all the little bits like this---they all add up.

I should have been more clear...I meant the spring/thackery washer could break.

Re: Rocker shafts - uncertainty! - 01/19, 2016, 3:52 am Posted By: Gregrsv

hi Tridentman
With the spacers fitted as i have and the newer rockers with the notches , should i then have the later rocker shafts with the helical groove to allow oil along to flow along the shaft. I'm hoping so cos I've just cut a groove along both shafts to let a bit more oil along!!
Ive just kept it a real shallow groove and spiralled it as best i can with the dremel!
we'll see how it goes now!
I did notice on strip down the exhaust rocker was discoloured and looked like it had been threatening to pick up or seize, although during use i never heard and squeaks from top end , also I've just done the valves and didn't notice any undue wear on the top of the valves or any sign of burning /pitting on seats. so hopefully the shaft damage was historical and someone else drama!
wait till you see i'll be looking for valve seals next as it'll be reeking like an old fergie tractor !!!!
cheers
greg

Re: Rocker shafts - uncertainty! - 01/19, 2016, 4:38 am Posted By: John Healy

Since my name was mentioned I thought I would review the history of the notched rocker arms.

The notched (non-drilled) rocker arms came out of a project at Umberslade Hall for the Triumph and BSA triples. It redirected some of the flow of oil away from the push rod cup and put more oil on the valve and the valve tip.

Beside the new notched (non-drilled) rocker arms the change include a rocker shaft with a deep groove extending the length of the shaft and repositioning of the flat and Thackeray (double coil spring) washers. These parts, including the repositioning of the rocker Thackeray and flat washer was used on all BSA and Triumph triples. The repositioning of the washers, with the flat washer against the rocker

arm, is the key to redirecting the oil through the rocker arm notch and to the valve area. As is the shaft long groove which allows oil to flow to the end of the rocker arms. Other wise if the spring washer is left against the rocker arm the oil just dribbles out the end of the rocker arm.

Now,if there was going to be a problem with the Thackeray against the inside of the rocker box you would have heard about it by now. All BSA & Triumph triples have this set-up.

How Meriden ended up with the new rocker design is unknown to me, but it was in a period where BSA was doing more buying for the group in an effort to get some economies of scale. But non-drilled notched rocker arms showed up at Meriden in 1969.

See Tricor Service Bulletin No. 25 April 1969 650 and 500 models:
There was a mid-year change in the rocker arms - after DU79965 and 500 # H63307, the hole drilled in the rocker arm to supply oil to the ball was omitted in favor of a notch at each end of the rocker arm. Flat washers must be used against the side of the rocker arm on the later design!

And yes, the new rocker arms became standard on the 650 and 500. But in what was a huge disconnect between engineering and production neither the grooved shaft or the relocation of the washers never found their way to the assembly line. Both of which are essential for oil to flow through the top-end.

Has any one of you put clear oil line on the rocker arm feed for a late 1969-1972 650 and watched the oil sit gurgling in the pipe seeming not to be going any where?

Well in 1973 the light bulb must have gone off in the long tunnel between engineering and assembly and they finally grooved the rocker shaft. Oil began flowing again. Did they change the Thackeray - well, no.

To make the system work as designed, you need to finish the job and put the flat washer against the side of the rocker.

If you don't the rocker will get enough oil to keep it from seizing to the shaft, but there will be no flow to adequately lubricate the valve adjuster or push rod cup.

And the solid spacers work OK, but if they are not set-up properly it tends to increase the noise level as the rocker arm slides from side to side. Never seen one break-up!

Re: Rocker shafts - uncertainty! - 01/19, 2016, 5:15 am Posted By: Gregrsv

Guys
Thanks for all the info ,
John
Ive machined a groove to let oil flow and I've assembled the the rockers with washer next to the rockers and spacer next to the casing.
As for a clear pipe i didn't try it but i did try fitting the rocker lube pipe to both the rocker covers whilst on the bench, i then fitted an oil can to the feed pipe and pumped , pressure built up whilst pumping but the ends of the rockers barely got wet with oil before i grooved the shaft.
I did the oil can experiment now I've grooved the shaft and things are much better.
cheers
greg

Re: Rocker shafts - uncertainty! - 01/19, 2016, 9:34 am Posted By: Tridentman

Greg--I cannot improve on Johns description of the situation.
Certainly using the grooved spindles with the spacers is A OK.
Just make sure that the spacers and rockers are all assembled in their original positions.
When machining the spacers they are made to fit ---that is they are not identical in terms of thickness.
When you have the rocker box assembled make sure that the rockers can easily rotate with little or no end movement.
HTH

Re: Rocker shafts - uncertainty! - 01/19, 2016, 9:54 am Posted By: triton thrasher

> **Originally Posted by Tridentman**
>
> TT--less friction = more power to the back wheel.
> I would agree--not a lot--but in racing every little bit counts.

Oh I can read the Unity catalogue! Has anyone measured the difference in effort required to move the rocker?

Some common mods make a difference to speed and some just don't. We've all seen drilled timing pinions.

Buying shims in bulk and packing them in go-faster kits = profit.

Re: Rocker shafts - uncertainty! - 01/19, 2016, 10:08 am Posted By: kevin

i've got some off-the-shelf rocker spacers made by . . . whoever that company was (from indiana?) that used to make the really nice high performance tubular pushrods for triumphs, but doesn't, anymore. not kibblewhite.

. . . alloy-tech. illinois.

http://www.ebay.com/itm/1104-Alloy-Tech-Triumph-500-Twin-Rocker-Spacers-New-Set-of-4-/231420126206 (Link: https://www.ebay.com/itm/1104-Alloy-Tech-Triumph-500-Twin-Rocker-Spacers-New-Set-of-4-/231420126206)

anyway, i have them in my street bike, and another set on hand for a race motor. they installed with no tightness and almost no axial play, which is an issue because if they're loose they're no better than misplaced thackery washers for directing oil.

the thackery washers cause enough friction in the stock set up to make the rockers noticeably stiff to work back and forth by hand, no matter where you install them. with the hardened spacers installed instead the rockers are floppy loose. the machine revs quite freely, with no additional clatter but i can't say that i have noticed a difference at the rpms i run it at (under 7000). no dyno info to compare.

i've read that one must carefully check and correct the location of the lash adjuster centerline over the valve tip when installing these things, but mine were fine.

Re: Rocker shafts - uncertainty! - 01/19, 2016, 11:18 am Posted By: Tridentman

TT--just a bit of machining and a bit less friction.
What is not to like?

Re: Rocker shafts - uncertainty! - 01/19, 2016, 11:50 am Posted By: triton thrasher

> **Originally Posted by Tridentman**
>
> What is not to like?

The time and money that could have been usefully spent.

Re: Rocker shafts - uncertainty! - 01/19, 2016, 11:59 am Posted By: Tridentman

"The time and money that could have been usefully spent."
Value judgments made by the individual IMHO.
If the individual wants to replace the Thackeray washers by spacers then---it is up to him.

Re: Rocker shafts - uncertainty! - 01/19, 2016, 12:00 pm Posted By: Zombie

Like paying the internet bill so we can all take the time to discuss such things.

Ohh! I know... Beer, and pizza!!! I always have money/time for beer, and pizza.
Way better than fixing some clunky old bike.

Re: Rocker shafts - uncertainty! - 01/19, 2016, 12:55 pm Posted By: MarksterTT

Thackeray washers make assy. of the top end much easier. Spacers allow the rocker arms to flop around and loose contact with pushrods on assembly, not a big deal but annoying none the less. I never could tell any difference in noise or power on my street Triumphs with the spacers and after reading in the TIOC about Gary Nixon's track bike using the Thackerays, well good enough for me and easier to assemble the boxes to the head to boot.

Re: Rocker shafts - uncertainty! - 01/19, 2016, 1:14 pm Posted By: Tridentman

Each to their own.
Spacers are not compulsory!

Re: Rocker shafts - uncertainty! - 01/19, 2016, 1:32 pm Posted By: Triless

In "Triumph Tuning " by Stan Shenton it is stated that ""The Thackeray spring washers should be replaced with hardened steel distance pieces. It is impossible to lay down a set thickness for these since manufacturing tolerances cause variations in each individual engine. What must be watched is that the rocker,when set up with its spacers and the oil feed dome nut tightened, has its pin directly in line with the centre of the valve stem. This can be checked without the need for assembling the rocker box on the head, for when it is correctly positioned the rocker adjuster will be directly in line with the rocker box 1/4" mounting stud."
"There is no need to allow rocker end float on the shaft because ideally there should be no end float but the rocker should be completely free. Special experiments have shown that when an engine warms up, the rocker end float increases so there is no danger of any locking up ".
Interesting stuff, though much of which has already been said. Both my Triumph road bikes have the

original Thackeray set up, but the spacer idea will be considered for my T140 race project. Also, checking should be also done with the rocker boxes assembled to ensure correct pushrod length,so that the aduster is smack on the centre of the valve stem at half lift.

Re: Rocker shafts - uncertainty! - 01/19, 2016, 2:07 pm Posted By: Zombie

This is all good food for thought.
Mr. NickL has me wondering where I can find 99999 more 0.00009 improvements to make a full 1%.

I KNOW THEY ARE IN THERE! I'll take anything I can get.

Smooth hand grips! Less drag, and they HAVE to be worth a 0.00009th.
99998 more to go!

Re: Rocker shafts - uncertainty! - 01/19, 2016, 7:03 pm Posted By: Triless

Yep, and drill holes in the soles of your boots, cut your finger nails an d toenails to the quick and leave your socks and jocks off!

Re: Rocker shafts - uncertainty! - 01/19, 2016, 8:40 pm Posted By: Zombie

Then the lid, and goggles have to go as well.

Re: Rocker shafts - uncertainty! - 01/19, 2016, 9:16 pm Posted By: Triless

Struth! He's not wearing gloves! Thats taking it a bit too far!

Re: Rocker shafts - uncertainty! - 01/20, 2016, 1:29 am Posted By: Hillbilly bike

I made a slight straight groove using a Dremel tool in the rocker shafts and also rearranged the Thackeray and thrust washers on three Triumph 650's. Lacking sophisticated laboratory testing equipment to test the results I unscrewed a rocker inspection cap and it appeared to be "oiler" inside...

On the Thackery waskers; does every little bit help for performance? Maybe, maybe not...I told my rider improvements had been made for more power...In reality I did nothing mechanical but the bike went faster...

Re: Rocker shafts - uncertainty! - 01/20, 2016, 1:51 am Posted By: gavin eisler

my Beesa motor has a mix of thackeray washers and steel spacers. The steel spacers are much much easier to assemble. Stopping the thackeray washers from dropping into the notches of an A65 rocker spindle is a real PITA.

Re: Rocker shafts - uncertainty! - 01/20, 2016, 9:24 am Posted By: JubeePrince

> **Originally Posted by Hillbilly bike**
>
> In reality I did nothing mechanical but the bike went faster...

Perception is 99% reality.

Cheers,

Steve

Re: Rocker shafts - uncertainty! - 01/20, 2016, 10:52 am Posted By: triton thrasher

> **Originally Posted by Hillbilly bike**
>
> I did nothing mechanical but the bike went faster...

I'm gonna try that!

Re: Rocker shafts - uncertainty! - 01/20, 2016, 4:30 pm Posted By: Zombie

Now THAT could be the BritBike "T" shirt motto.

Re: Rocker shafts - uncertainty! - 01/20, 2016, 7:36 pm Posted By: HawaiianTiger

It's the same phenomena as the placebo effect. That sugar pills cures lots of things.....

And sole reason there are thousands of charlatans selling snake oil to the gullible. It does work, scientifically, about 10-25% of the time. Magic! Double blind studies prove it with each and every study. They never bother to try to explain it, though. But they do account for it.

Physicians don't underestimate the power of the mind to heal. They're never going to let on that they make use of the placebo effect every day.

Sorry if I've blown it for anyone. But, it's the truth.

And loud pipes make a bike faster. For real!

Cheers,

Bill

Re: Rocker shafts - uncertainty! - 01/21, 2016, 2:39 am Posted By: John Healy

> **Quote**
>
> I told my rider improvements had been made for more power...

You probably get more gain from skipping the jelly doughnuts from breakfast than solid rocker spacers.

Re: Rocker shafts - uncertainty! - 01/21, 2016, 4:21 am Posted By: Zombie

Jelly doughnut residue provides a slick coating on the imbibed that reduces drag/wind resistance.

another 0.0009%. only 0.00007 more to go!!!

Placebo effect:
Fedoras, and heavy frame glasses are so totally "in" this year.

Re: Rocker shafts - uncertainty! - 01/21, 2016, 7:07 am Posted By: triton thrasher

The supposed benefit is to the cams and followers, rather than net power at the rear wheel.

Re: Rocker shafts - uncertainty! - 01/21, 2016, 7:31 am Posted By: kevin

i've never looked at them as anything other than a means of reducing friction in the valve train. they very clearly do this, as the force needed to move the rockers with your hands when using thackery washers is quite noticeable, and is just as noticeably gone with the spacers installed.

but it's only an ounce or two of force. does that reduction of an ounce or two of force at zero rpm translate into a reduction of more than an ounce or two at high rpm? i don't know. does the friction increase with speed?

if the resistance to motion due to friction increases with rpm, then they're worthwhile. if there's still only an ounce or two of additional force from the thackery washers at 7000 rpm, then no.

Re: Rocker shafts - uncertainty! - 02/16, 2016, 12:24 pm Posted By: kevin

well, my wife says i can't leave well enough alone, and she's mostly right. so i've been thinking about

these little spacers, and wondering about just exactly how much force it really does take to move a rocker arm with a thackery washer on it.

like everybody else, i have bits and pieces of stuff lying around to mess with.

so here's some old rocker box i have with thackery washers in it, installed the way i mostly see them, against the rocker arm, with the flat washer on the other side against the rocker box:

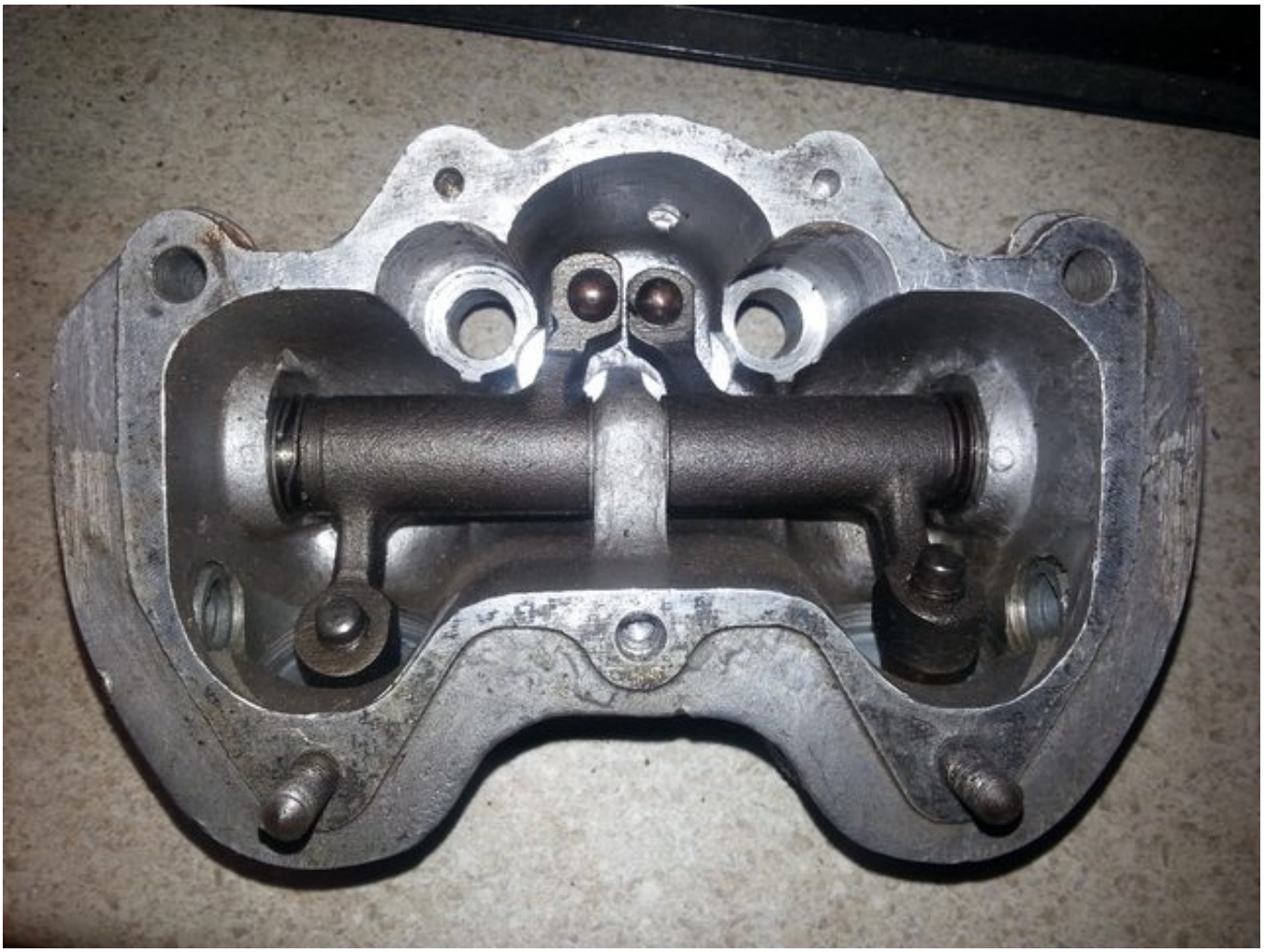

notice how the washer is digging into the oil cutout on the rocker arm:

and here's another one, with the steel spacers installed, done before i got it. whoever he was, he also ground the casting flash away a little bit, but didn't polish anything:

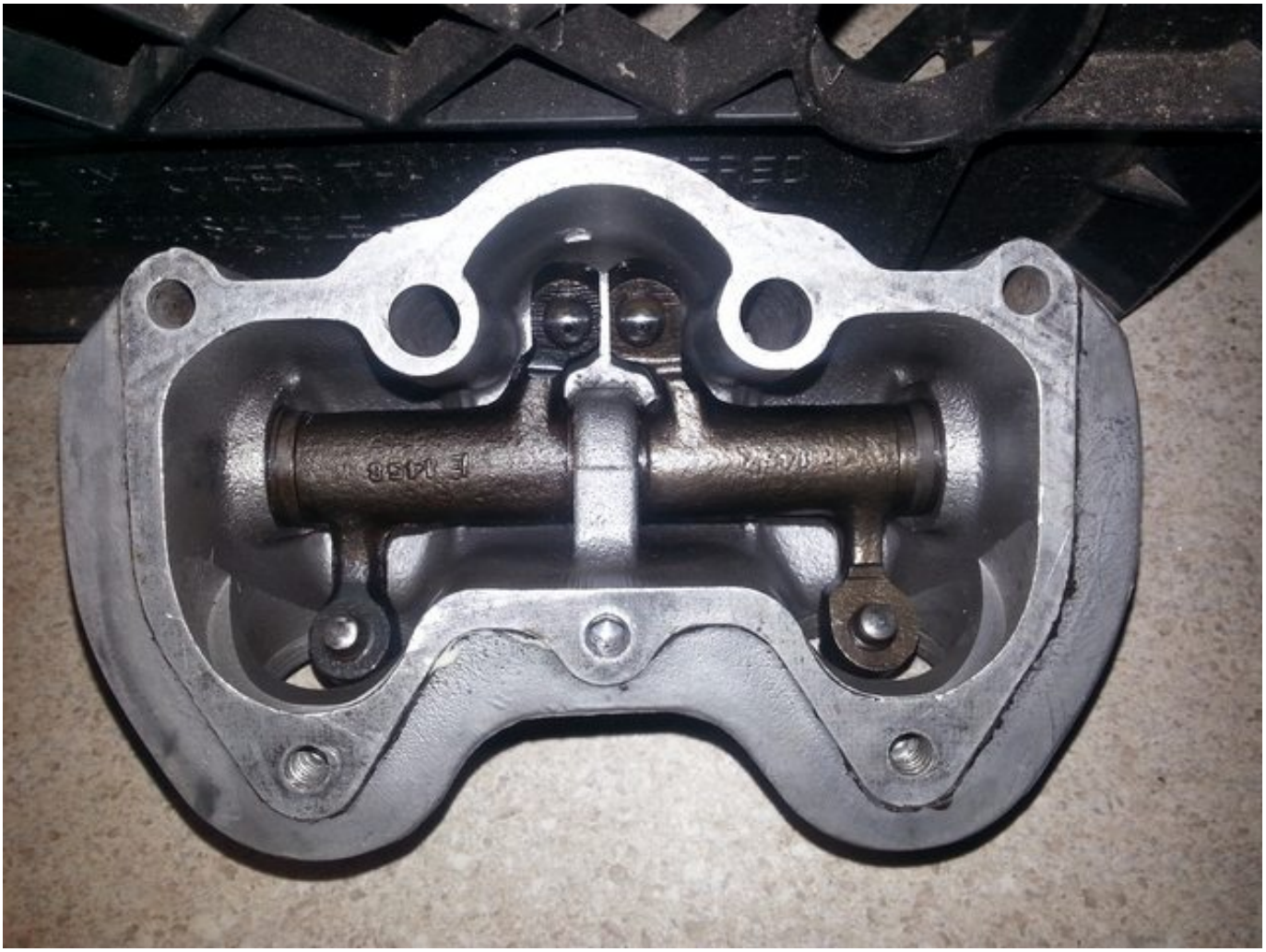

he installed the spacer against the rocker arm, in the same spot as the thackery washers in the other rocker box. these rockers don't have the little cutout:

anyway, i lubed everything up as well as could through the hollow rocker shaft and from the outside with PB Blaster:


FIX IT
Bonus Buy! 20% FREE
CONCENTRATED COPOLYMER PENETRANT
Revolutionary PENETRATING MAGNETIC LUBRICANT
BREAKS LOOSE FASTER
"THE ORIGINAL NUT & BOLT BUSTER"
• Rusted nuts, bolts, pipe threads, etc.
Fabulous
B'LASTER
PB
POWERFUL
PENETRATING
CATALYST
HIGH FLASHPOINT FORMULA
• Frees Everything Faster
• Stuck, Rusted, Squeaking Joints
• Corroded Pipe Threads, etc.
DANGER: FLAMMABLE. VAPOR HARMFUL. EXCESSIVE
MAY BE FATAL IF SWALLOWED. CONTENTS UNDER PRESSURE.
read carefully other cautions on back panel.
Manufactured by THE B'LASTER CORPORATION
CLEVELAND, OHIO • 1-800-858-9800

and then stuck an old pesola spring scale on them to see how much tension it would take to make the rockers of each type rock. i used to use the scale to weigh squirrels, but it works okay for rocker arms too:

in a dozen or so tries, the rocker arms with the thackery washers always took a minimum of 350 grams to start any kind of movement, and never swung fully at under 450 grams of tension. sometimes it took as much as 600 grams to make them move.

in contrast, the rocker arms with the spacers would fall under their own weight, either way, whenever i twisted the rocker box. i never bothered to hook up the spring scale to them at all.

so here are some thoughts and observations:

-- neither of the rocker shafts had any looseness or any apparent binding in their travel.

-- i didn't take anything apart to inspect the insides, but the box with the thackery washers didn't feel like it took any more or less force to move than they always do.

-- according to what i've learned about friction, sliding friction doesn't increase with velocity, so the 300-450 gram force needed to start the rocker moving at the top and bottom of its travel won't increase with rpm.

-- this only measured static friction, the force necessary to start the rocker rocking. as soon as it started to move, it moved too quickly for me to see what the spring scale might have been showing. so i don't know what the resistance of the moving parts might have been, after they started moving.

-- i didn't try to see whether it's harder to move a rocker from the absolute end of its travel than it might be from a little less than that. so in hindsight it's possible that the rockers might take less force to move if you start them closer to where they actually sit on top of the valve at zero lift. forgot to control for that . . .

-- this was done with cold parts, not warmed up, with no oil pressure inside (such as it is in a triumph), and with absolutely nothing else held constant.

-- the boxes are different kinds-- one is from a later head (hollowed out for the two-piece head bolts, and drilled for dowels), with the little oil cutout. the other is the earlier style, not milled out inside, and has the drilled rocker arms, which you can see from the holes in the pushrod ball ends.

and here are the guilty parts in question:

so it's clear that some friction exists, and that the friction is measurable at the point where the rocker arms stop moving, reverse direction, and start moving again. once they're moving, the force needed to keep them moving is way less.

but is this significant? i don't know. i suspect not, because with valve springs that might be pressing on these rocker shafts with way over 100 pounds of force, each, a few hundred grams of friction doesn't seem like a lot. but i'm not an engineer.

i have bikes with them, and bikes without them. i haven't ever noticed a difference, but i am not particularly sensitive and haven't pushed rpms to the limits, either.

Re: Rocker shafts - uncertainty! - 02/16, 2016, 1:09 pm Posted By: JubeePrince

Boy, I wish I had that kind of time on my hands! 😁

Interestingly, the box with the spring washer has the end of the spring in the machined divot which diverts oil flow away from the valve tips. The box with the spacers has no machined divots (not good for valve tips), but it looks like the ball pins are drilled (good for the push rods). Pictures aren't terribly clear, but it sure looks like in both cases the adjusting pins have taken a hammering.

When I rebuilt my top-end a few years ago, I took a look at the face of my adjuster pins with a powerful magnifier. They looked like the pock-marked far side of the moon! I put new adjusters in and did the thrust/thackery washer mod advocated on here by others. Because, as we all know the top end doesn't need much oil, but it sure needs it in the right places!

Steve

Re: Rocker shafts - uncertainty! - 02/16, 2016, 2:03 pm Posted By: kevin

> **Originally Posted by JubeePrince**
>
> Boy, I wish I had that kind of time on my hands!

it's nasty snowing and my new job hasn't started yet.

it better soon, though, my bank account is headed for the infra red

Re: Rocker shafts - uncertainty! - 02/16, 2016, 3:09 pm Posted By: jurbanec

so why use the springs? Quieter? You'd think at some point in time during 50+ years of production some guy at Triumph Engineering Company probably uttered...."hey what if we just use a spacer instead of that spring"

Re: Rocker shafts - uncertainty! - 02/16, 2016, 4:53 pm Posted By: Tridentman

Strictly speaking you should machine the solid spacers to fit each of the positions with a suitable running clearance as there is some variation in the gap due to machining tolerances etc.
The Thackeray spring effectively compensates for differences in clearance and so is a cheap pretty effective way of keeping the rocker arms in position.
HTH

Re: Rocker shafts - uncertainty! - 02/16, 2016, 7:40 pm Posted By: triton thrasher

> **Originally Posted by jurbanec**
>
> so why use the springs? Quieter? You'd think at some point in time during 50+ years of production some guy at Triumph Engineering Company probably uttered...."hey what if we just use a spacer instead of that spring"

They did.

But they didn't want to mess about with feelers and alternative shim thicknesses on the assembly line.

Re: Rocker shafts - uncertainty! - 02/17, 2016, 5:01 am Posted By: Hillbilly bike

Kevin...400 grams....And when the rocker is trying to compress a 180 pound spring at 7000 rpm...Does the 400 grams,a bit less than one pound, really matter? Does the friction of the Thackeray washer help to "dampen" harmonics when the valve is closing? You need to do a before an after on a Spintron machine to make a real comparison....

I believe racers use spacer to eliminate a potential failure of spring .....

Re: Rocker shafts - uncertainty! - 02/17, 2016, 6:10 am Posted By: kevin

i really don't think the sliding friction of the thackery washers matters, for exactly the reason you point out -- the actual friction at speed is no more than at idle. and i don't think 450 grams could really provide significant spring damping, but maybe it could? certainly friction dampers in suspension systems were obsolete as soon as anybody had anything else.

and maybe they make less noise, but i run 0.010 valve clearances in the bike i have them in, so i probably couldn't hear them anyway.

the spring washers are certainly more fragile, but then i've never had one break. if you're running later rockers, the spacers do prevent you from putting a leaky spring washer against the cutout, but that's not a dissassembly i do very often.

so i guess i can provide a great big cosmic: don't know . . .

Re: Rocker shafts - uncertainty! - 02/17, 2016, 8:07 am Posted By: JubeePrince

> **Originally Posted by kevin**
>
> so i guess i can provide a great big cosmic: don't know . . .

Hey Kevin -

Certainly not for lack of trying, thanks.....and good luck with the new job!

Cheers,

Steve

Re: Rocker shafts - uncertainty! - 12/11, 2019, 4:09 pm Posted By: britcyclenut

I'm about to make my own spacers. What would be a good running clearance between the spacer and rocker arm?

Re: Rocker shafts - uncertainty! - 12/11, 2019, 4:35 pm Posted By: John Healy

> **Quote**
>
> Jelly doughnut residue provides a slick coating on the imbibed that reduces drag/wind resistance.
>
> another 0.0009%. only 0.00007 more to go!!!
>
> Placebo effect:
> Fedoras, and heavy frame glasses are so totally "in" this year.

The small talk around the shop was: "Drilling the cam wheels, thinning cam wheels, replacing rocker arm springs
with solid spacers fell into the class of mechanical engineering by mental masturbation."

It does keep you in the garage at night and out of the bars.

Doing any of this, without having a way of measuring any increase any parasitic
oscillation of the valve train and loss of power, is a guess at best.

Re: Rocker shafts - uncertainty! - 12/11, 2019, 5:29 pm Posted By: koncretekid

I'm dreaming of the extra speed I'll get if I do all of the above improvements! It's nice to know there is more to come.....

Re: Rocker shafts - uncertainty! - 12/11, 2019, 8:17 pm Posted By: koan58

...while mentally playing with your... brain.

While I would agree that lightening cam wheels is wonker tech, some of the lightening of reciprocating parts is valid.
The sensible parts involved are valve spring collars, adjuster pins and nuts AND the unecessary metal at the extremities of the rocker arms. (I'm not talking of shaving the arms to wafer thin-ness, after all the closer to the pivot the less important it is) but much surplus non-functional material can be lost at the adjuster and pushrod end, without sacrificing any mechanical integrity.
All of these savings will help the valve spring return the valve as intended by the cam (rather than jumping and then bouncing). Its called inertia, and its a very important factor at high rpm.
The Thackeray washers aren't inertia, but they are resistance to the free movement of the rockers. That resistance does add to the overall effort that the valve-springs have to cope with. Spacers there will obviate that resistance.
All these little things may add up to a slightly easier running valve gear. Say that without stronger springs the valve runs truer to the cam, without leaping, to a bit higher rpm.
It doesn't mean a horsepower increase perse, but it may make a difference between finishing a race or not.
Even in a road situation I like the idea of maximising my components, and if I can ease the load on my old cams etc I think that is a worthwhile thing to do.
All you nay sayers, please carry on wearing it all out regardless! We pays our money and takes our choices!

Britbike forum

rocker shaft spring washer location?? - 03/11, 2017, 3:53 pm Posted By: Curmudgeon

On unit twin Triumphs there are two flat washers and one spring washer for each rocker arm. The Haynes manual shows them located one way and the parts book shows them a different way. Shouldn't the spring washer face outboard against the rocker box housing with the flat washer against the rocker arm?

Re: rocker shaft spring washer location?? - 03/12, 2017, 1:38 am Posted By: kommando

Depends on which rockers you have, drilled rockers its spring to rocker, slotted its thrustwasher to rocker but make sure rockershaft was a flat or a spiral groove or the oil never gets to the slots .

Re: rocker shaft spring washer location?? - 03/12, 2017, 11:35 am Posted By: Curmudgeon

Thanks kommando. I have the slotted rocker arms with plain rockershaft, no scrolling. Do you know when Triumph made this change?

Re: rocker shaft spring washer location?? - 03/12, 2017, 11:52 am Posted By: kommando

Very late 60's early 70's. You can get later T140 rocker shafts with the spiral groove or stone a flat or mill a slot in your current ones.

(Link: http://s135.photobucket.com/user/kommando828/media/IMG_20170306_190008.jpg.html)

Re: rocker shaft spring washer location?? - 03/14, 2017, 12:55 pm Posted By: redrooster

Hi Kommando,
When you put your groove in the spindle did you put it in line with the oil holes and when you fitted it did you put the groove up or down and why. I have read that the grove should go at the top but it seems more logical to put it at the bottom to help flow.
Thanks again

Re: rocker shaft spring washer location?? - 03/14, 2017, 3:23 pm Posted By: kommando

I followed John Healy, groove to top.

Re: rocker shaft spring washer location?? - 03/15, 2017, 9:31 am Posted By: redrooster

I am sure John is right but why is the groove better at the top ?

Re: rocker shaft spring washer location?? - 03/15, 2017, 10:22 am Posted By: kommando

Because oil is heavier than air so by starting at the top it goes down and hope fully goes where it should and not exit before it has a chance to go up. What makes you think putting at the bottom improves flow, I can't think of a reason as flow is regulated by the gap, the bigger the gap the better the flow. I tested it with lightly pressured oil and it all got to the right places.

Re: rocker shaft spring washer location?? - 03/15, 2017, 11:01 am Posted By: Curmudgeon

I'm working on a 1970 Bonneville rocker box now. It has a spiral groove cut into the rocker shaft. The flat washer on the side nearest the oil line feed has a much smaller inside diameter than the other 3 flat washers. Therefor it is impossible to put that flat washer against the rocker arm because the shaft can't pass through it. The only choice I have is to put the Thackery spring washers against the rocker arm. I believe this to be incorrect and perhaps this thing was put together wrong at the factory.

Re: rocker shaft spring washer location?? - 03/15, 2017, 12:25 pm Posted By: kommando

Yes the factory fitted the wrong parts in the wrong place, you need per rockerbox 4 1/2" ID thrust washers and 2 spring washers, the 3/8" ID washers go into the spares box.

The order is rockerbox, spring, thrust 1/2", rocker, thrust 1/2", rockerbox alloy center, thrust 1/2", rocker, thrust 1/2", spring, rockerbox.

Re: rocker shaft spring washer location?? - 03/15, 2017, 1:13 pm Posted By: redrooster

Ok, up it is going,
So the oil comes from the feed pipe, through the oil hole, into the hollow spindle, spindle fills, oil comes out of the oil holes at the top of the spindle, along the grooves at the top of the spindle lubricating between the rockers and spindles, out where the grooves are cut in the rockers with the flat washer against the rockers, oil is sent in the right direction and not restricted as it would be if the springs were against rockers then follows a downward path through the pushrod tubes to the followers/cam, down to the scavenge pump, back to the restrictor before the tank and starts again. Think I got it now, let me know if any of this is wrong. I know this all basic stuff to most here but if you don't know.
Let me know if there is anything else I should know
Thanks again

Re: rocker shaft spring washer location?? - 03/15, 2017, 3:20 pm Posted By: kevin

actually the oil pressure to the rockers is limited by the leaks at the various junctions

pressure is inversely proportional to drips per minute

Re: rocker shaft spring washer location?? - 03/15, 2017, 4:01 pm Posted By: TR7RVMan

Hi, Just this morning I tore down the rocker boxes on the '69 Bonnie. Motor has been apart before. Has non grooved shafts.

Crumudgeon, that is how they came from factory. The small hole washer went against wall of box & the narrow end of shaft went through it. Then spring, then rocker, then flat washer against center support. On left side of box there is the center support washer, rocker, spring, then flat washer against wall of box.

The prior mechanic on this motor installed a large hole flat washer between spring & rocker. Looking at this extra washer looks like it was sanded thinner. But looks like it was made from a large hole Triumph washer. So now there is 3 washers on the right rocker.

He also had swapped the spring & the outer flat washer, meaning washer is against rocker & spring against alloy of box wall.

Very closely examining alloy of box it is obvious spring has NOT been rotating whatsoever. There is on wear pattern & only a tiny shinny spot on alloy where end of spring was.

Trying to rotate spring with screw driver it doesn't want to move easy at all. The rocker very freely rotates on flat washer though so it doesn't try to rotate spring.
Don

Re: rocker shaft spring washer location?? - 03/15, 2017, 4:03 pm Posted By: TR7RVMan

Regarding grinding an oil slot in rocker, to be clear, John Healy did a straight slot, not spiral?
Thanks, Don

Re: rocker shaft spring washer location?? - 03/16, 2017, 1:13 am Posted By: kommando

Yes straight line as its easy to do with a stone.

Re: rocker shaft spring washer location?? - 03/16, 2017, 5:49 am Posted By: John Healy

> **Quote**
>
> Regarding grinding an oil slot in rocker, to be clear, John Healy did a straight slot, not spiral?
> Thanks, Don

What John said is BSA used a groove in the rocker shaft on the triples (Triumph and BSA) and Triumph, in 1973, used a spiral (shaft # 71-3549). You can choose how you want to address this. What I did say if you choose a groove I feel you should keep it toward the top. All of the pressure is on the bottom of the shaft.
John

Re: rocker shaft spring washer location?? - 03/19, 2017, 10:56 am Posted By: redrooster

Hi Kommando,
I figured oil flow would be better if the groove was at the bottom because.
Oil flows in to the hollow in the rocker spindle.
Along the spindle and out of the oil holes at the bottom of the spindle in line with the groove.
Oil then runs along the groove.
Out through the cut between the flat washer and the rockers.
Then runs down to the push rod tops etc
Explain to me why this is not the best way.
Would the oil not need more pressure if the oil holes in the spindle were at the top, just to push it up there.
Really interested in opinions on this.

Re: rocker shaft spring washer location?? - 03/19, 2017, 11:10 am Posted By: redrooster

Hi John,
This might sound stupid but when you say all the pressure is on the bottom of the shaft do you mean the oil pressure or mechanical pressure on the shaft.
If for mechanical pressure do you think the groove would be better at the bottom for oil flow. Is this why triumph did a spiral as a good solution for mechanical and oil pressure.
If so is the spiral grooved shaft better than the straight.
I know I am still new at all this but that is why I ask so many questions that may seem simple to the more experienced on the forum.

Re: rocker shaft spring washer location?? - 03/19, 2017, 12:22 pm Posted By: kommando

A spiral spreads the 'weak' spot around the full diameter, the springs and pushrods both push the rockers upwards so the highest metal to metal pressure is at the bottom of the rocker and rocker shaft so last place you want a groove.

Hi Kommando,
I figured oil flow would be better if the groove was at the bottom because.
Oil flows in to the hollow in the rocker spindle.
Along the spindle and out of the oil holes at the bottom of the spindle in line with the groove.
Oil then runs along the groove.
Out through the cut between the flat washer and the rockers.
Then runs down to the push rod tops etc
Explain to me why this is not the best way.
Would the oil not need more pressure if the oil holes in the spindle were at the top, just to push it up there.
Really interested in opinions on this.

There is not a lot of oil pressure at this point, the feed comes from the return to the oil tank and only gets to the rockers due to there being a restriction/reduction in diameter in the pipe as it enters the tank to develop some back pressure. So if you get a blockage in the rocker feed all the oil goes back to the tank and the pressure never builds enough to clear the blockage as it just overcomes the restriction instead.

Re: rocker shaft spring washer location?? - 03/19, 2017, 12:30 pm Posted By: kevin

> **Originally Posted by redrooster**
>
> I know I am still new at all this but that is why I ask so many questions that may seem simple to the more experienced on the forum.

worry not. these lovely old machines were manufactured in an era where photography was rare, specifications were often changed without notice, and fascinating errors and mistakes were shipped out to the public, free of charge.

i've been messing with these things for 45 years and i discover stuff i never knew on this forum just about every time i look into it.

Re: rocker shaft spring washer location?? - 03/26, 2017, 2:53 pm Posted By: redrooster

Ok, got it, spiral is best for strength and oil flow to lubricate between spindle/rockers but straight is as good to lubricate rockers / push rods / followers and cheaper if you cut it in to the existing spindle.
Thank you again.

Re: rocker shaft spring washer location?? - 05/04, 2017, 3:17 pm Posted By: redrooster

Hi commando and everyone who has posted,
After the rebuild and bike running I have really good oil feed to the top end where as before it was almost non existant (I was going along the lines of thinking it was the inline oil filter I had fitted before the oil splitter causing less pressure to the rockers.. but the mod can be the only thing that fixed it.
Success is great